SMLW High-Res(With Model Update+Extended Tables+Wiring Diag) with bleeds.pdf 1 2/24/20 2:47 PM

The new degree of comfort™

American Brand with Global Reach

RESIDENTIAL COOLING SOLUTIONS

High EER Cooling only Decorative Wall-mount Split Unit

Model: SMLW – SAGL





PRODUCT CATALOGUE

PRESTIGE Series

R-410A

Air | Air Conditioners

SMLW High-Res(With Model Update+Extended Tables+Wiring Diag) with bleeds.pdf 2 2/24/20 2:47 PM

The new degree of comfort.™



SMLW High-Res(With Model Update+Extended Tables+Wiring Diag) with bleeds.pdf 3 2/24/20 2:47 PM

TABLE OF CONTENTS

Topic	Page
1. Rheem Introduction	4-5
2. Core Technology	7
3. Nomenclature	9
4. Model Numbers	9
5. Panel Design	10
6. Technical Specifications	11
7. Extended Capacity Tables	12
8. Wiring Diagram	13-15
9. Remote Control	16
10. Pipe Size Chart	17

SMLW High-Res(With Model Update+Extended Tables+Wiring Diag) with bleeds.pdf 4 2/24/20 2:47 PM

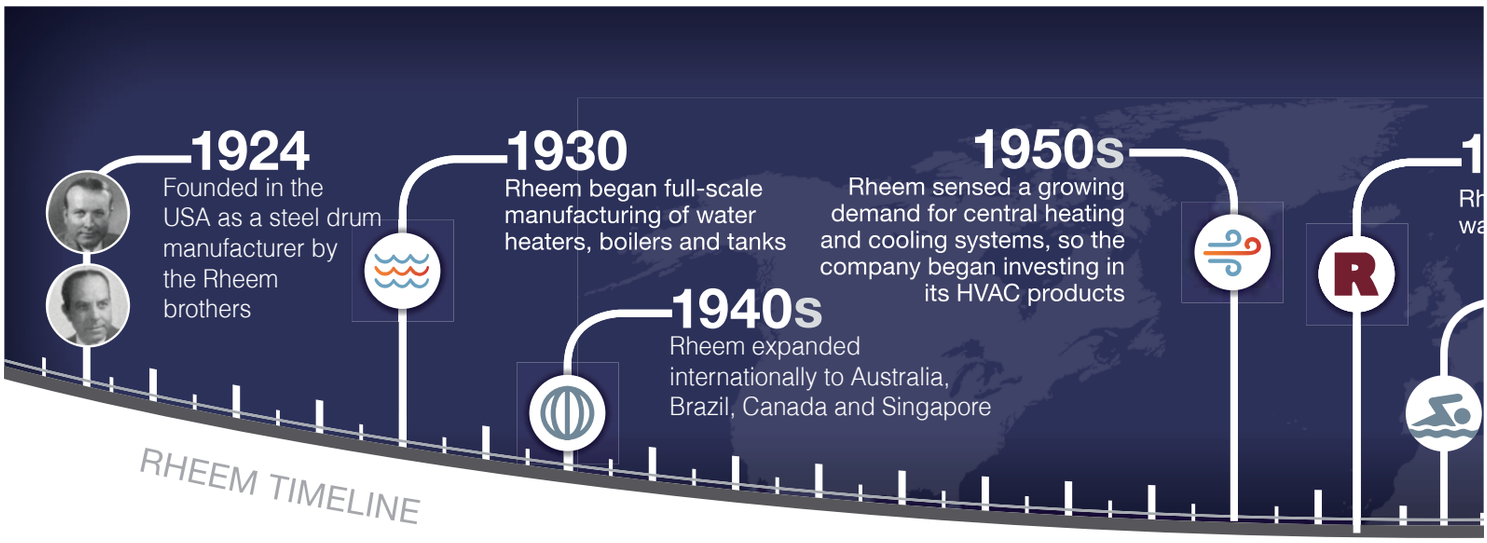

ABOUT RHEEM

Rheem is the only North American manufacturer delivering innovative, energy-efficient air and water solutions to homes and businesses in more than 70 countries worldwide. From its Atlanta, Ga. headquarters, three U.S. manufacturing facilities, state-of-the-art distribution center and Advanced Technology Integration (ATI) Lab, Rheem designs, builds and supplies some of the most reliable, environmentally responsible and technologically advanced products in the industry. Under the “One Rheem Quality” promise, every Rheem product built anywhere in the world is held to the same high standard of excellence.

RHEEM PRODUCT OFFERINGS



WATER HEATING



HEATING & COOLING



POOL & SPA



REFRIGERATION

Together, the Rheem family of distinguished brands—Rheem, Ruud, Raypak, Richmond, ProTech, ProStock and HTPG—is committed to bring best-in-class comfort solutions to homeowners and businesses all over the world.

EXCELLENCE IN MANUFACTURING, RESEARCH & DEVELOPMENT

Rheem maintains seven research and development centers and ten labs in North America, Japan and Australia. Investing in these facilities enables the company to continually build and refine its core competencies in electronics, gas combustion, heat transfer and materials.

All Rheem products meet or exceed rigorous industry and regulatory standards for performance, reliability, efficiency, and air and water quality. From design and fabrication to finished product assembly, each phase in the manufacturing process is monitored and measured to ensure the highest quality, durability and operating excellence. Rheem products are routinely tested and certified by various government and third-party testing labs to ensure the highest quality standards.

The same standard of excellence applies to every aspect of Rheem’s operations, from its 7,000 global Rheem employees to its valued Rheem and Ruud distributors and contractors.

SMLW High-Res(With Model Update+Extended Tables+Wiring Diag) with bleeds.pdf 5 2/24/20 2:47 PM

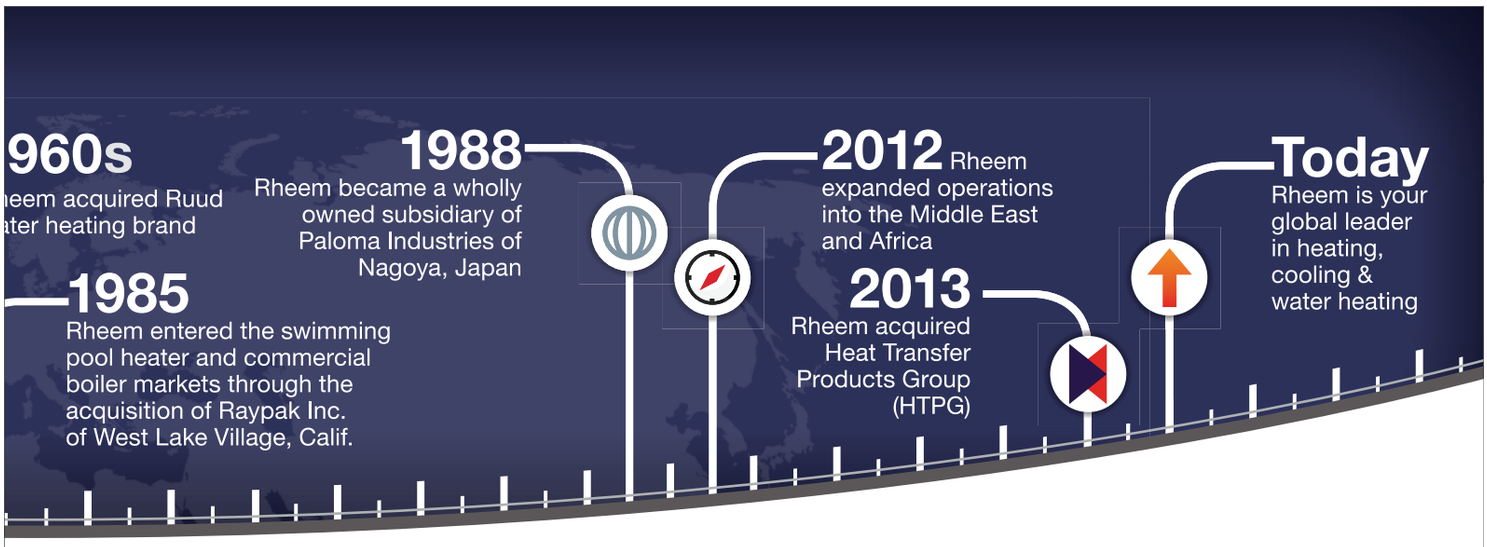

A GLOBAL LEADER

Rheem is uniquely positioned as a global market leader. As the leading manufacturer specializing in complete air and water solutions, Rheem is the only company that can help homeowners anywhere in the world manage more than 60% of their home energy use through advanced comfort and control technologies.

A truly international corporation, Rheem makes and markets its best-in-class products all over the globe.



Strengthening its current international presence and expanding its quality products and services into promising new global markets is central to Rheem's corporate strategy for continual, customer-focused growth.

14 RHEEM OFFICES

7 RESEARCH AND DEVELOPMENT

25 MANUFACTURING FACILITIES

SMLW High-Res(With Model Update+Extended Tables+Wiring Diag) with bleeds.pdf 6 2/24/20 2:47 PM

PERFORMANCE
THAT LASTS LONGER

The new degree of comfort.™



SAGL Condensing Units

- Undergone a 1000 hrs salt spray test
- Powder coated design
- Metallic Jacket to withstand harsh Gulf climate
- More than 30 years of presence in the Middle East

Comfortable cooling with high-efficiency that is easy on your wallet.

HIGH ENERGY-EFFICIENCY

R-410A offers greater efficiency, saving the energy costs, and is much better for the environment of your loved ones.

ENVIRONMENT FRIENDLY

No. 1 in reliability by leading consumer products review magazine. Designed & manufactured in North America.

RELIABLE & DURABLE

SMLW High-Res(With Model Update+Extended Tables+Wiring Diag) with bleeds.pdf 7 2/24/20 2:47 PM

CORE TECHNOLOGY

Indoor Unit

Sleep Mode
While the unit is in cooling, energy-saving or dry mode, start the sleep mode.
a. After an hour, the set temperature will increase by 1°C (2°F).
b. After 2 hours, the set temperature will increase by another 1°C (2°F).
So, the set temperature will totally increase by 2°C (4°F) in 2 hours and then the unit will continue to operate at this temperature.

Horizontal Auto Swing*
For a more efficient air and temperature distribution throughout the room, air discharge Louvre can automatically move horizontally.

High Performance Coils:
Copper tubes are bonded to aluminum fins for high heat transfer efficiency.

Ease of Service & Installation
Fan motors, blowers and controls are easily accessible through the decorative return air grille. Flare type refrigerant connections provide easy installation. Electrical wiring and piping are possible from back and side of the unit.

*Not applicable to 30K BTU Model

Vertical Auto Swing
For a more efficient air and temperature distribution throughout the room, air discharge flaps can automatically move vertically.

Quiet Operation
The Unit is designed to operate at the lowest noise by an ultra-low fan speed and auto adjustment.

Timer
Turns the air conditioner ON or OFF automatically within a 24-hour period.

Multiple Flow Speeds
Multi-variable flow speeds, ensuring more precise control and a more comfortable breeze.

Infrared Remote Control
Remote control with an LCD display for convenient usage

Outdoor Unit

- The compressors are hermetically sealed and incorporate internal high temperature motor overloaded protection and durable insulation on the motor windings.
- The cabinet is constructed of powder coated galvanized steel.
- Copper tube / Aluminium fin coils used for all models.
- Service valves are standard on all models.

Applicable to 18, 24 & 30K BTU model in

- Power and control wiring are kept separate.
- Every unit is factory charged and leak tested.
- Heavy galvanized base plate for SAGL series.

SMLW High-Res(With Model Update+Extended Tables+Wiring Diag) with bleeds.pdf 8 2/24/20 2:47 PM

RESPONSIBLE
FOR A GREENER PLANET

The new degree of comfort.™



SMLW Wallmount Series

HIGH ENERGY-EFFICIENCY

Comfortable cooling with high-efficiency that is easy on your wallet.

ENVIRONMENT FRIENDLY

R-410A offers greater efficiency, saving the energy costs, and is much better for the environment of your loved ones.

RELIABLE & DURABLE

No. 1 in reliability by leading consumer products review magazine. Designed & manufactured in North America.

NOMENCLATURE

IDU:

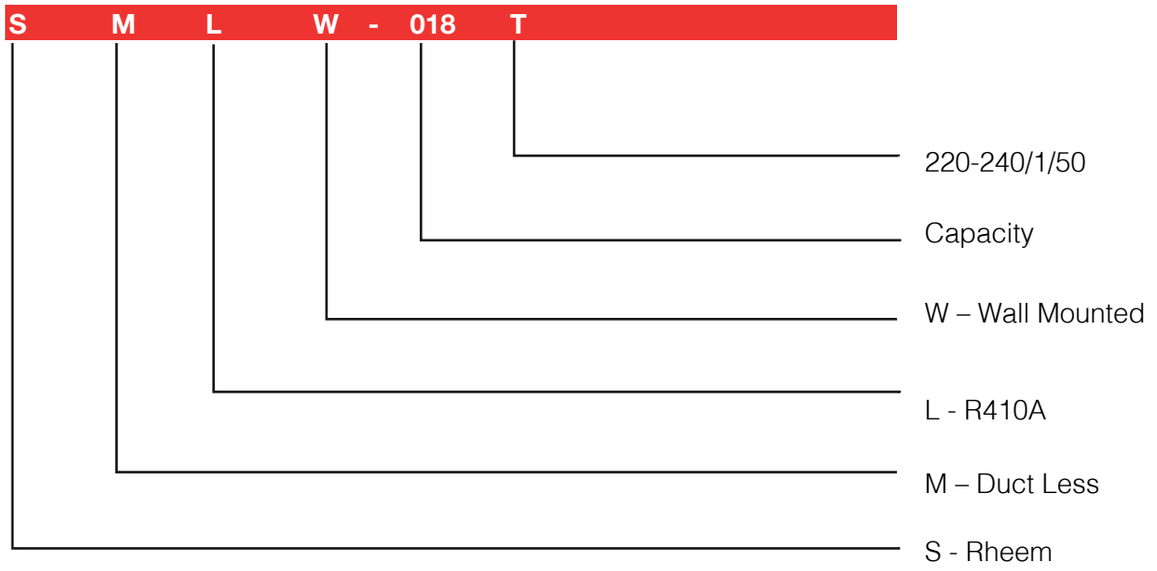

ODU:

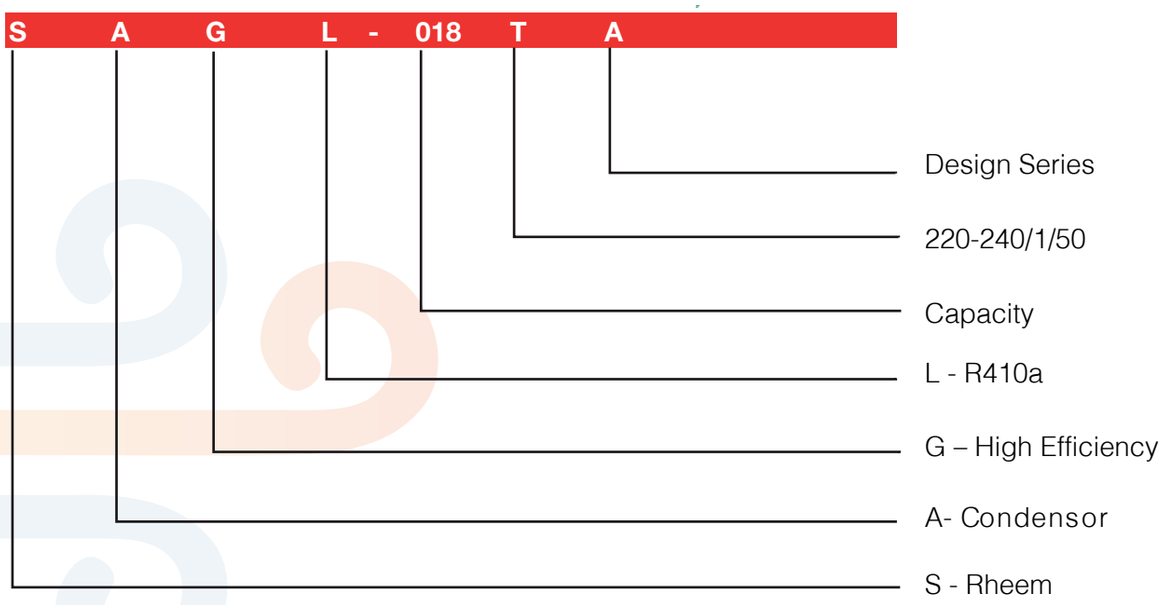

MODEL NUMBERS

Model	IDU Model Nos.	ODU Model Nos.
18000	SMLW-018T	SAGL-018T (+) (++)
24000	SMLW-024T	SAGL-024T (+) (++)
30000	SMLW-030T	SAGL-030T (+) (++)

Note:
(+) Followed by suffix:
A – Base Unit
S – Base unit with oil separator

(++) Optional Suffix:
A35 – Gold fin coil with time delay
035 – Gold fin coil
011 – Time delay

SMLW High-Res(With Model Update+Extended Tables+Wiring Diag) with bleeds.pdf 10 2/24/20 2:47 PM

PANEL DESIGN

Model: SMLW-018T



Model: SMLW-024T



Model: SMLW-030T



SMLW High-Res(With Model Update+Extended Tables+Wiring Diag) with bleeds.pdf 11 2/24/20 2:47 PM

TECHNICAL SPECIFICATIONS

Model			SMLW-018T + SAGL-018TA	SMLW-024T + SAGL-024TA	SMLW-030T + SAGL-030TA
Panel Image (1)					
TMBH @ T1 *		Btu/hr	15525	21837	26000
TMBH @ T3 **			12305	18235	21629
TMBH @ T3 ***			11080	16714	20168
Power Input @ T1 *		W	1197	1680	1850
Power Input @ T3 **			1492	2148	2353
Power Input @ T3 ***			1483	2186	2322
EER @ T1 *		Btu/(hr.W)	13.00	13.00	14.05
High Wall-mounted Indoor Unit (R-410A)					
Model			**SMLW-018T**	**SMLW-024T**	**SMLW-030T**
Airflow (Hi / Med / Low) (2)		CFM	500/459/383/324	736/706/588/500	835/705/615 (Hi / Med / Low)
Indoor Noise Level		dB(A)	47/44/40/36	50/46/42/38	54/50/46
Power Supply		V-Ph-Hz	220-240v/50hz/1ph		
Fan		Material	Plastic		
		Type	Cross Flow Fan		
		Qty	1	1	2
Blower Motor	Type		Permanent Split Capacitor		
	Qty		1		
	Power Input	Watt	73	73	94
Expansion Device Type			Orifice		
Air Filter	Type	Washable	Plastic		
Evaporator	Number of Rows	n	2	2	2
	Tube Pitch x Row Pitch	Inches	12 X 28.15	15 X 33.26	15 x 42.28
	Fin Per Inch	N	18	18	17
	Fin Type	Aluminium	Hydrophillic		Slit Fins
	Tube Type	Copper	Inner Grooved		
	Tube Outside Diameter	mm	7		
	Coil Area	m2	0.22	0.32	0.41
Connection	Suction	Inches	1/2	5/8	3/4
	Liquid	Inches	1/4	1/4	1/4
	Drain	Inches	7/8	7/8	7/8
Dimension	W x D x H	mm	970×224×300	1078×246×325	1356 x 255 x 330
Approx. Weight		Kg	13.5	16.5	20.8

Matching Condensing Unit (R-410A)					
Model			**SAGL-018T(+)(++)**	**SAGL-024T(+)(++)**	**SAGL-030T(+)(++)**
Discharge Direction			Top Discharge		
Type			Cooling Only		
Power Supply		V-Ph-Hz	220-240v/50hz/1ph		
Compressor	Type		Scroll		
	Rated Load Amp. (RLA)	A	7.9	10	12.5
	Locked Rotor Amp. (LRA)	A	44	52	60
MCA (Main Circuit Amp)		A	12	17	19
Fuse Size	Min	A	15	30	30
	Max	A	15	30	30
Outdoor Fan Motor	Rated Load Amp. (RLA)	A	0.6	0.6	0.8
Condensor Fan Blade		Type	Metallic - Propellar		
Condensor	Number of Row	N	1	1	1
	Coil Area	M^2 / FT^2	1.03 / 11.06	1.03 / 11.06	1.27 / 13.72
Outdoor Air Flow		CFM (LPS)	1573 (742)	1573 (742)	2362 (1142)
Outdoor Noise Level		dB(A)	70	70	69
Dimension	W x D x H	mm	600 x 600 x 616	600 x 600 x 616	702 x 702 x 616
Weight		Kg	57.2	57.6	65.3
Refrigerant			R410A		
Refrigerant Charge		Oz	61	70	78
Refrigerant Pipe****	Liquid Line	Inch (mm)	3/8 (9.53)	3/8 (9.53)	3/8 (9.53)
	Suction Line	Inch (mm)	5/8 (15.88)	5/8 (15.88)	3/4 (19.05)
Total Equivalent Pipe Length		m	50	50	50
Maximum Vertical Separation	ODU above IDU	m	30	30	30
	ODU below IDU	m	24	24	24

* @ 95°F outdoor DB temperature, 80/67°F indoor on-coil DB/WB temperature, pipe length 5 m.
** @ 115°F outdoor DB temperature, 80/67°F indoor on-coil DB/WB temperature, pipe length 5 m.
*** @ 115°F outdoor DB temperature, 76/63°F indoor on-coil DB/WB temperature, pipe length 5 m.
*** Refer detailed pipe size chart for capacity multiplier w.r.t pipelength.

(1) Panel Images do not indicate dimensions and are for illustrative purpose only
(2) All capacities are based on High speed air flow

EXTENDED CAPACITY TABLES

SMLW-018T + SAGL-018TA

AFR (CFM)	EWB	EDB	Outdoor Temperature								
			35°C			40°C			46°C		
			TC	SC	PI	TC	SC	PI	TC	SC	PI
Low	17.2	24.4°C	3.776	3.143	1.174	3.420	3.022	1.307	2.992	2.876	1.467
	19.4	26.7°C	4.193	3.249	1.181	3.798	3.093	1.315	3.323	2.906	1.475
Med	17.2	24.4°C	3.933	3.308	1.182	3.562	3.181	1.315	3.117	3.028	1.475
	19.4	26.7°C	4.368	3.420	1.189	3.956	3.256	1.323	3.462	3.059	1.483
High	17.2	24.4°C	4.097	3.482	1.190	3.711	3.348	1.323	3.247	3.187	1.483
	19.4	26.7°C	4.550	3.600	1.197	4.121	3.427	1.331	3.606	3.22	1.491

SMLW-024T + SAGL-024TA

AFR (CFM)	EWB	EDB	Outdoor Temperature								
			35°C			40°C			46°C		
			TC	SC	PI	TC	SC	PI	TC	SC	PI
Low	17.2	24.4°C	5.634	4.636	1.646	5.168	4.421	1.884	4.609	4.162	2.170
	19.4	26.7°C	6.147	4.775	1.656	5.638	4.501	1.873	5.029	4.172	2.132
Med	17.2	24.4°C	5.749	4.780	1.658	5.296	4.578	1.895	4.752	4.336	2.178
	19.4	26.7°C	6.272	4.923	1.668	5.778	4.661	1.883	5.184	4.346	2.140
High	17.2	24.4°C	5.866	4.928	1.670	5.426	4.741	1.905	4.899	4.516	2.186
	19.4	26.7°C	6.400	5.075	1.680	5.920	4.826	1.893	5.344	4.527	2.148

SMLW-030T + SAGL-030TA

AFR (CFM)	EWB	EDB	Outdoor Temperature								
			35°C			40°C			46°C		
			TC	SC	PI	TC	SC	PI	TC	SC	PI
Low	17.2	24.4°C	6.548	5.066	1.816	6.100	4.976	2.039	5.562	4.869	2.306
	19.4	26.7°C	7.023	5.282	1.822	6.542	5.118	2.056	5.964	4.922	2.337
Med	17.2	24.4°C	6.821	5.333	1.83	6.327	5.214	2.050	5.734	5.072	2.314
	19.4	26.7°C	7.315	5.560	1.836	6.785	5.363	2.068	6.149	5.127	2.345
High	17.2	24.4°C	7.105	5.613	1.844	6.562	5.463	2.061	5.911	5.283	2.322
	19.4	26.7°C	7.620	5.853	1.850	7.038	5.620	2.079	6.339	5.341	2.353

Remark:

AFR: Air flow rate (CFM)

EWB: Entering Wet Bulb Temp. (°C)

EDB: Entering Dry Bulb Temp. (°C)

TC: Total Cooling Capacity (kW)

SC: Sensible Cooling Capacity (kW)

PI: Power Input (kW)

Notes:

1. Extended capacity data is estimated based on actual performance testing on rated conditions.
2. Direct interpolation is permissible. Do not extrapolate.

SMLW High-Res(With Model Update+Extended Tables+Wiring Diag) with bleeds.pdf 13 2/24/20 2:47 PM

WIRING DIAGRAM

Model: SMLW-018T

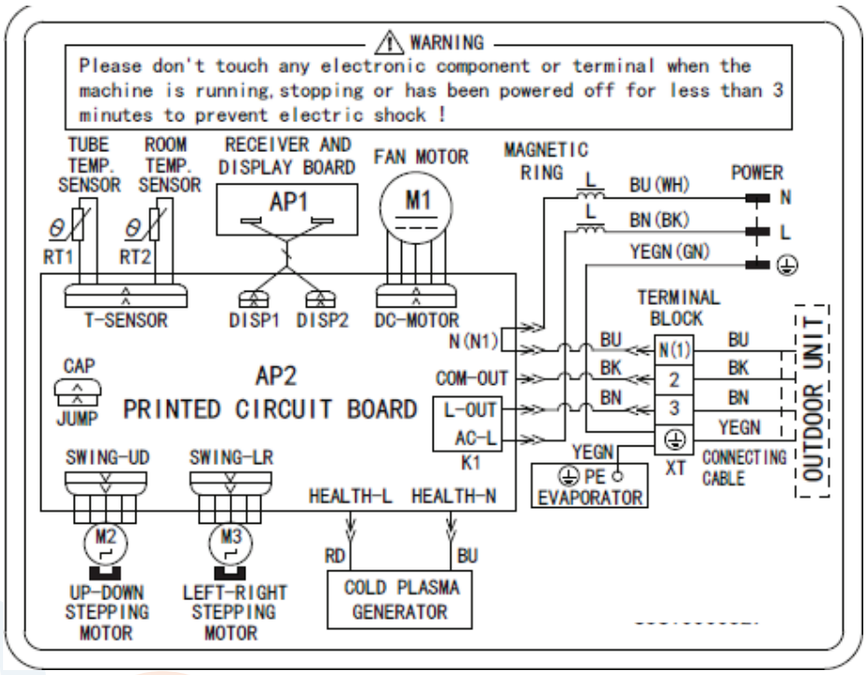

Model: SMLW-024T

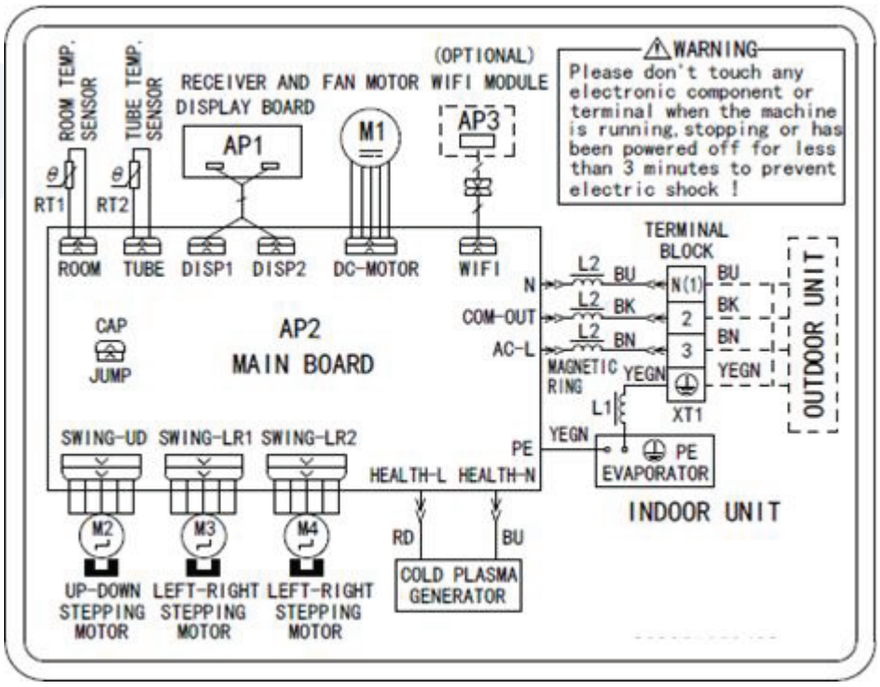

SMLW High-Res(With Model Update+Extended Tables+Wiring Diag) with bleeds.pdf 14 2/24/20 2:47 PM

WIRING DIAGRAM

Model Numbers: SMLW-030T

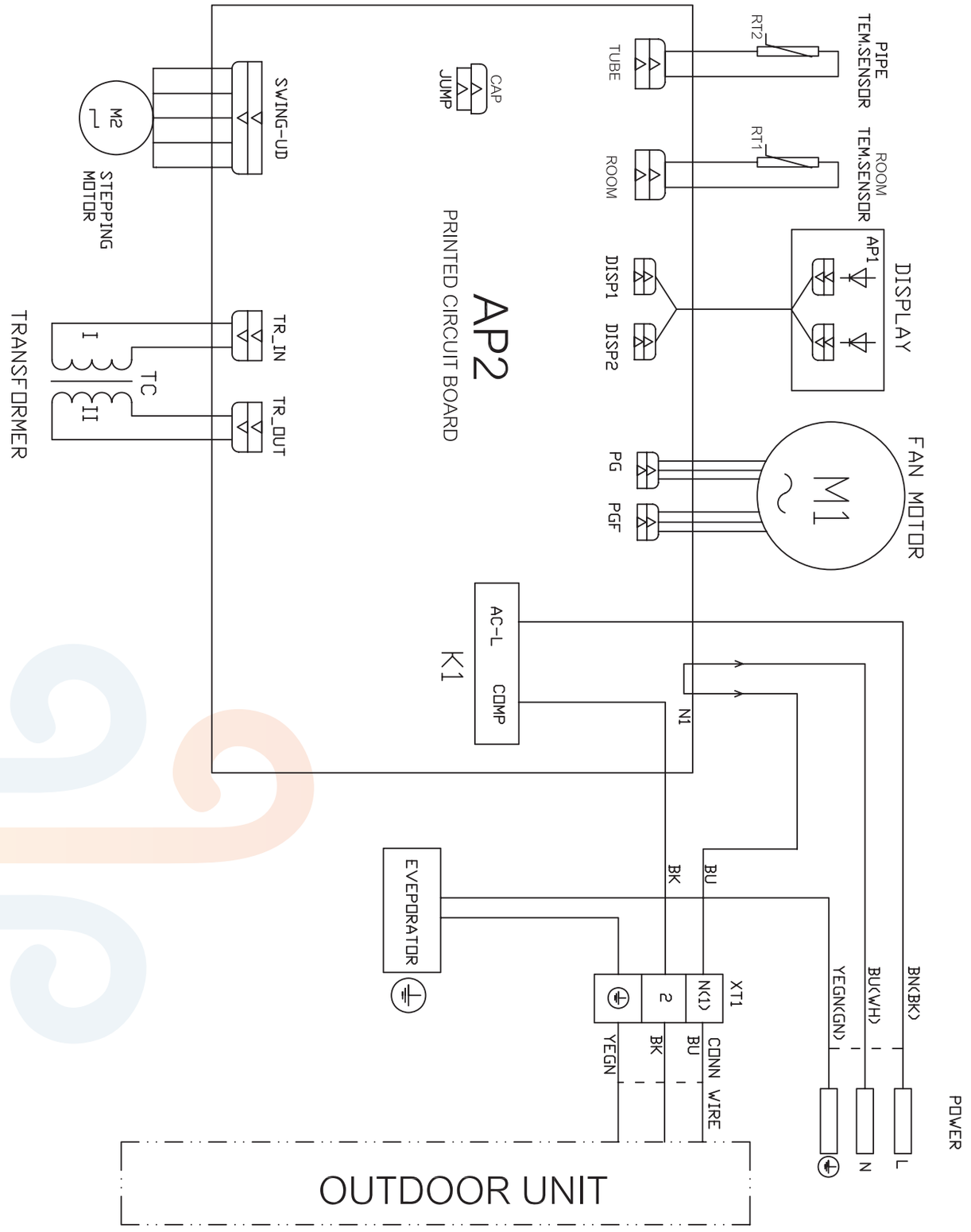

WIRING DIAGRAM

Model Numbers: SAGL-018TA, SAGL-024TA, SAGL-030TA

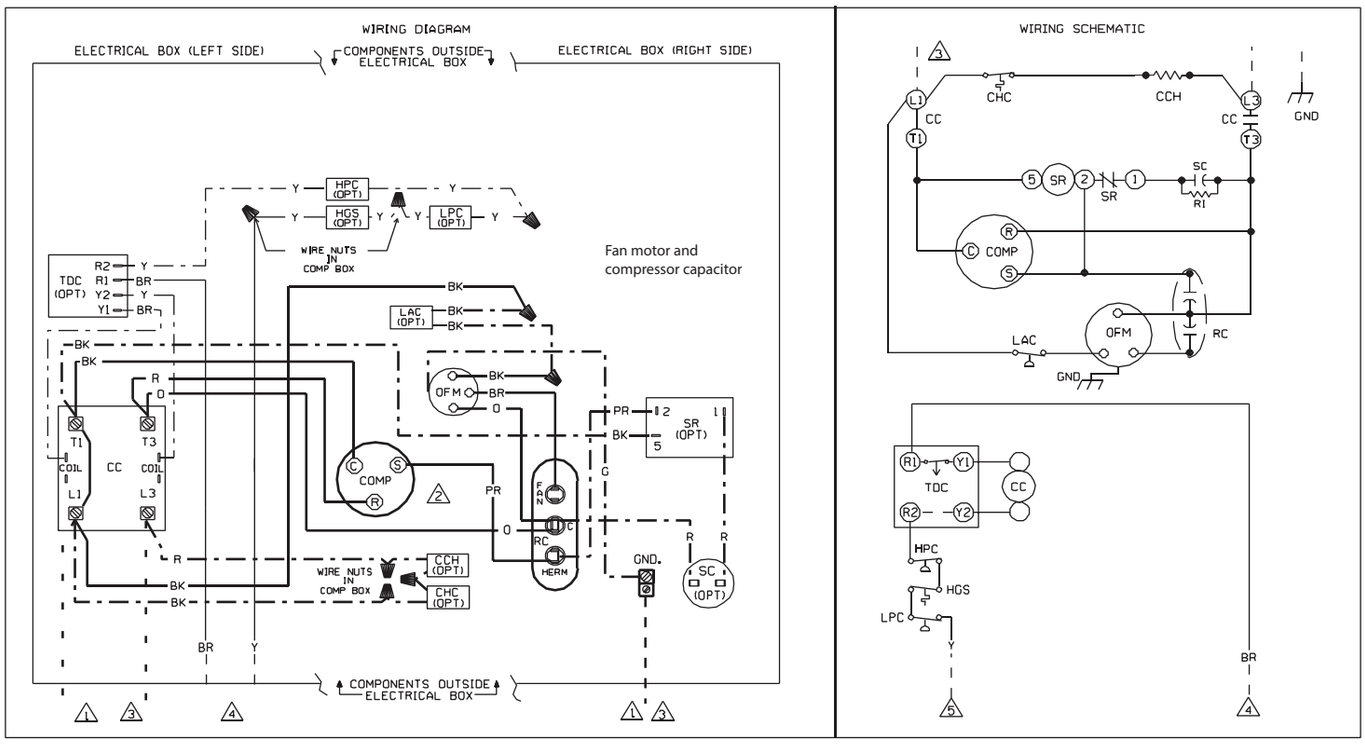

COMPONENT CODE

CC	COMPRESSOR CONTACTOR
CCH	CRANKCASE HEATER
CHC	CRANKCASE HEATER CONTROL
COMP	COMPRESSOR
GND	GROUND, CHASSIS
HPC	HIGH PRESSURE CUT-OUT CONTROL
LAC	LOW AMBIENT COOLING CONTROL
LPC	LOW PRESSURE CUT-OUT CONTROL
OFM	OUTDOOR FAN MOTOR
OPT	OPTIONAL
RC	RUN CAPACITOR
SC	START CAPACITOR
SR	START RELAY
TDC	TIME DELAY CONTROL
HGS	HOT GAS SENSOR
PTCR	POSITIVE TEMPERATURE COEFFICIENT RELAY

NOTES: △

1. CONNECTORS SUITABLE FOR USE WITH COPPER CONDUCTORS ONLY.
2. MOTOR COMPRESSOR THERMALLY PROTECTED AND ALL 3 PHASE ARE PROTECTED UNDER PRIMARY SINGLE PHASE CONDITIONS.
3. CONNECT FIELD WIRING IN GROUNDED RAINTIGHT CONDUIT TO 60 HERTZ DISCONNECT, VOLTAGE AND PHASE PER RATING PLATE. USE 60° C WIRE.
4. LOW VOLTAGE CIRCUIT TO BE N.E.C. CLASS 2 WITH A CLASS 2 TRANSFORMER 24 VOLT, 60 HERTZ.
5. TO THERMOSTAT SUB-BASE, REFER TO SYSTEM SCHEMATICS OR SCHEMATICS ON INDOOR SECTION FOR LOW VOLTAGE CONTROL WIRING.

WIRING INFORMATION

LINE VOLTAGE
- -FACTORY STANDARD ——————
- -FACTORY OPTION —·—·—·—
- -FIELD INSTALLED — — — —

LOW VOLTAGE
- -FACTORY STANDARD ——————
- -FACTORY OPTION —·—·—·—
- -FIELD INSTALLED — — — —

REPLACEMENT WIRE
- -MUST BE THE SAME SIZE AND TYPE OF INSULATION AS ORIGINAL (105° C MIN.)

WARNING
- -CABINET MUST BE PERMANENTLY GROUNDED AND CONFORM TO I.E.C., N.E.C., C.E.C. AND LOCAL CODES AS APPLICABLE.

WIRE COLOR CODE

BK__BLACK	O___ORANGE
BR__BROWN	PR__PURPLE
BL__BLUE	R___RED
G___GREEN	W___WHITE
GY__GRAY	Y___YELLOW

WIRING DIAGRAM

REMOTE AIR CONDITIONER
208/230 VOLT SINGLE PHASE

DR. BY	APP. BY	DATE	DWG. NO.	REV
JHB		01-19-04	90-101229-01	03

REMOTE CONTROL

Model: SMLW-018T + SAGL-018TA, SMLW-024T + SAGL-024TA, SMLW-030T + SAGL-030TA



1. ON/OFF button
2. MODE button
3. FAN button
4. TURBO button
5. ▲/ ▼ button
6. button
7. button
8. SLEEP button
9. I FEEL button
10. TIMER ON/TIMER OFF button
11. CLOCK button
12. QUIET button
13. X-FAN button
14. LIGHT button
15. /⌂ button
16. TEMP button

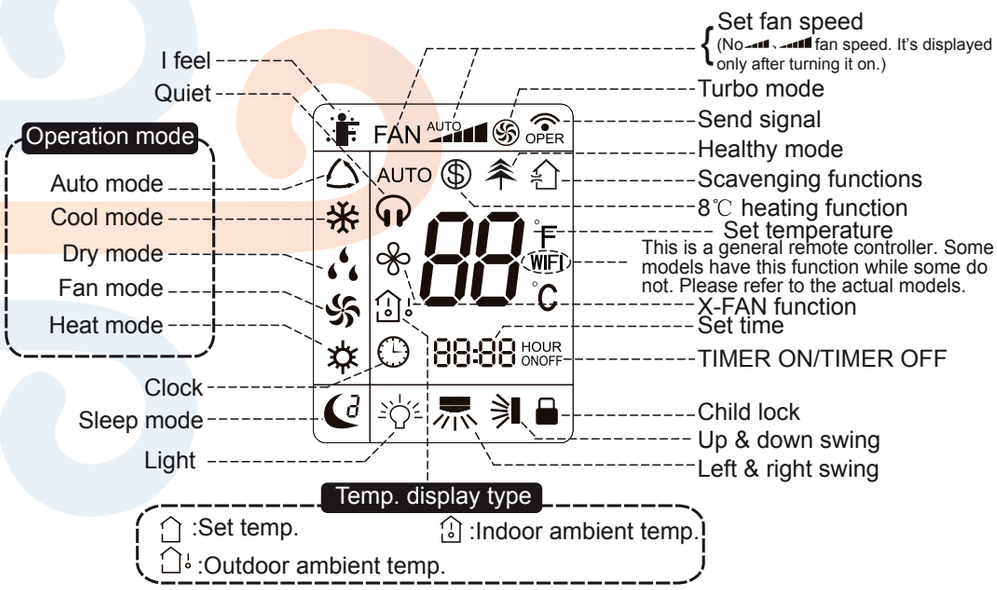

Note:

1. All indicators shown in the figure are for the purpose of clear presentation only. During the actual operation, only the relative functional signs appear on the display window.
2. If the indoor unit does not have any particular feature, then no corresponding operation will happen when the relative button is pressed.
3. For detailed operation, please refer the installation and operation manual for the product.

PIPE SIZE CHART

Single Stage	Liquid Line Size	Suction Line Size	Outdoor Unit ABOVE Indoor Unit		
			Equivelent Length in Meters		
			<15	15.5-22.5	23-50
			Maximum Vertical Seperation /		
SAGL-018	1/4"	5/8"	15 / 1.00	22.5 / 0.99	30 / 0.99
	5/16"	5/8"	15 / 1.00	22.5 / 0.99	30 / 0.98
	3/8"	5/8"	15 / 1.00	22.5 / 0.99	30 / 0.98
SAGL-024	1/4"	5/8"	15 / 1.00	22.5 / 0.99	30 / 0.98
	5/16"	5/8"	15 / 1.00	22.5 / 0.99	30 / 0.98
	3/8"	5/8"	15 / 1.00	22.5 / 0.99	30 / 0.98
SAGL-030	5/16"	5/8"	15 / 0.98	22.5 / 0.97	30 / 0.97
	3/8"	5/8"	15 / 0.98	22.5 / 0.97	30 / 0.97
	5/16"	3/4"	15 / 1.00	22.5 / 0.99	30 / 0.99
	3/8"	3/4"	15 / 1.00	22.5 / 0.99	30 / 0.99

Note: This chart is applicable for ODU with scroll compressor only.

Single Stage	Liquid Line Size	Suction Line Size	Outdoor Unit BELOW Indoor Unit				
			Equivelent Length in Meter				
			<15	15.5-22.5	23-30	30.5-37.5	38 - 50
			Maximum vertical Seperation / Capacity Multiplier				
SAGL-018	5/16''	5/8''	15/0.99	21.0/0.99	18/0.98	13.5/0.98	10.5/0.98
	3/8''	5/8''	15/0.99	22.5/0.99	24.5/0.98	24.5/0.98	24.5/0.98
	5/16''	3/4''	15/1.00	21.0/1.00	18/1.00	13.5/1.00	10.5/0.99
	3/8''	3/4''	15/1.00	22.5/1.00	24.5/1.00	24.5/1.00	24.5/0.99
SAGL-024	5/16''	5/8''	15/1.00	13.5/0.99	25/0.98	N/A	N/A
	3/8''	5/8''	15/1.00	22.5/0.99	24.5/0.98	24.5/0.97	24.5/0.97
	5/16''	3/4''	15/1.00	13.5/1.00	25/1.00	N/A	N/A
	3/8''	3/4''	15/1.00	22.5/1.00	24.5/1.00	24.5/1.00	24.5/0.99
SAGL-030	5/16'	5/8''	12/09.8	3/0.97	N/A	N/A	N/A
	3/8''	5/8''	15/0.98	22.5/0.97	24.5/0.97	24.5/0.96	24.5/0.96
	5/16''	3/4''	12/1.00	3/0.99	N/A	N/A	N/A
	3/8''	3/4''	15/1.00	22.5/0.99	24.5/0.99	24.5/0.99	24.5/0.98

Always Use the smallest Liquid Line allowable to keep system charge to a minimum
Vertical separation cannot Exceed 24.5 meter of length.
Note: This chart is applicable for ODU with scroll compressor only

SMLW High-Res(With Model Update+Extended Tables+Wiring Diag) with bleeds.pdf 18 2/24/20 2:47 PM

Notes

The new degree of comfort.™



SMLW High-Res(With Model Update+Extended Tables+Wiring Diag) with bleeds.pdf 19 2/24/20 2:47 PM

Notes

The new degree of comfort.™



SMLW High-Res(With Model Update+Extended Tables+Wiring Diag) with bleeds.pdf 22 2/24/20 2:47 PM

The new degree of comfort.™

Why Rheem?

American Brand with Global Reach, Dedicated to Quality & Innovation

Rheem is the only North American manufacturer delivering advanced, energy-efficient air and water solutions to homes and businesses in more than 70 countries worldwide. From its Atlanta Headquarters, three U.S. manufacturing facilities and Advanced Technology Integration (ATI) Lab along with its manufacturing, research and development centers all around the world, Rheem designs, builds and supplies some of the most reliable, environmentally responsible and high-performance products in the industry.

In the Middle East, Rheem has been present and its products are in service for over 30 years. In fact,the company has already installed more than one million ton of air-conditioning products.

Rheem products include (but not limited to):

- Full range of direct expansion Air-conditioning solutions such as Rooftop package units, ducted units, decorative splits.
- Advanced Integrated Air-conditioning, Heating & Water Heating energy saving and comfort systems such as H2AC and HumidiDry.
- Full range of water heating products including electric tank and tankless water heaters (electric and gas), boilers, heat-pump water heaters and solar powered water heating solutions.

For more information about our products and local distributors, please visit us at
www.Rheem-mea.com



For continuous product improvement, Rheem reserves the right to make changes to the product specifications without notice.

SMLW-SAGL-2017-UAE-14