The new degree of comfort.™

High Efficiency

SAGL-RHLH Series

Low height Air handler with Top Discharge
Condensing unit

CONDENSING UNITS - SAGL

Features

- Louvered steel cabinet painted and rated at 1008 hours salt spray per ASTM B117.
- Easily accessible control box.
  Condenser coils constructed with Copper tubing and enhanced aluminum fin.
- Exclusive Combination Grille/Motor mount secures the motor to the underside of the discharge grille for quiet fan operation.
- Bi-Directional Filter Driver (Shipped - not installed).
- Low Pressure Control (RXAC -A07).
- High Pressure Control (RAB-A07).

Applications

Outdoor condensing unit designed for ground level or rooftop installation. These units offer comfort and dependability for single, multi-family and light commercial applications.

Accessories (Optional)

Low Ambient Control (RXAC-A07).
Crankcase heater.
Sound enclosure.

AIR HANDLERS - RHLH

Features

- Low height design for ease of installation. Maximum height 16”.
- Polyester powder coated. 1008 Hrs salt spray tested as per ASTM-B117.
- Lower sound levels with enhanced blower housing design.
- 12 mm thick irradiated grade fire retardant EPE insulation.
- Inbuilt antifreeze protection.
- Powder coated drain pan. 1008 Hrs salt spray tested as per ASTM-B117.
- Inbuilt Microprocessor based controller.

ISO 9001:2000

The new degree of comfort.™

MODEL INDENTIFICATION

Air Handling Unit

R	H	LH	30	T	M
RHEEM EXPORT	Air Handler	Low Height	CAPACITY/1000 BTU/H	POWER T =220 - 240V 50 HZ-1PH	Transformer in built

Condensing Unit

S	A	G	L	18	T	(+) (++)
RHEEM	A = AIR CONDITIONER	50 Hz	DESIGN SERIES R-410A	NOMINAL COOLING CAPACITY 18 = 18,000 BTU/HR [5.28 kW] Total 8 Models up to 65 = 72000 BTU/HR/(21.12kW)	POWER **N**= 380-415V-50HZ-**3**PH **T**= 220-240V-50HZ-**1**PH	(+) : A = Base Unit S = Base unit with oil seperator (++): A35 = Coated coil with time delay 035 = Coated coil 011 = With time delay

ENGINEERING FEATURES

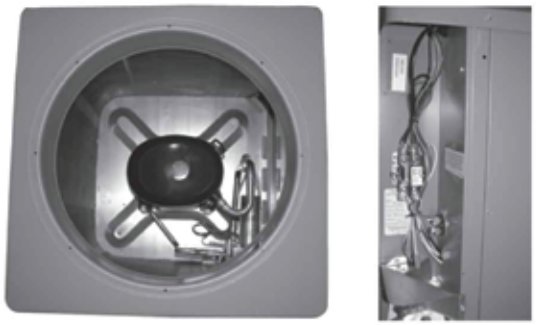

All controls and compressor are accessible for servicing by removal of its service panels.

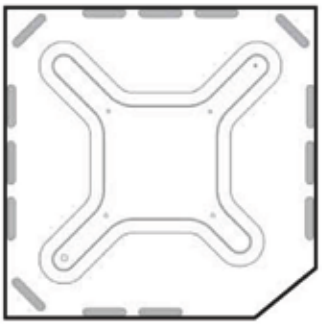

DO NOT OBSTRUCT DRAIN SLOTS (SHADED).

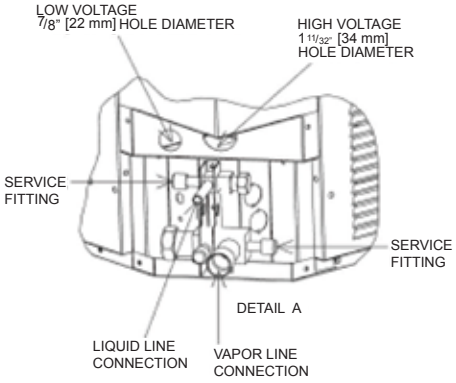

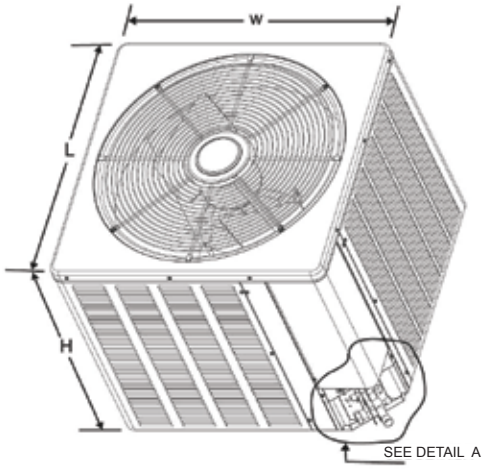

Condensing Units

1. Scroll compressor is hermetically sealed and incorporates internal high temperature motor overload protection and durable insulation on the motor windings. It is internally spring mounted and externally mounted on rubber grommets to reduce vibration and noise.
2. Compressors have an internal pressure-relief assembly to protect against excessive pressure differential.
3. All refrigerant connections are on the exterior of the units, located close to the ground for neat appearing installations.
4. Cabinet is constructed of painted galvanized steel. The full wraparound louvered grille protects the coil from damage.
5. The control box is located on the top side corner of the cabinet providing for easy access through a service panel.
6. Service valves are standard on all models.
7. Power and control wiring are kept separate.
8. Every unit is factory charged and tested.
9. Drawn base pan for extra corrosion resistance and sound reduction.
10. Time delay relay is standard feature.

Field Installed Accessories (Optional)

- Low Ambient Switch - Cycles outdoor fan to maintain adequate condensing pressures assuring liquid refrigerant flow to the coil. Allows indoor cooling with outdoor temperatures down to 0°F.(Model No. RXAD-A04) It is recommended that this control be installed in units to be operated at outdoor ambient temperatures under 70 F.
- Hard Start Kits -Available through the Parts Department.
- Crankcase Heater -Available through the Parts Department.

Condensing Unit Dimension & Weight

Model No. SAGL	Unit Dimensions			Weight	
	Width "W" Inches(mm)	Length "L" Inches(mm)	Height "H" Inches(mm)	Net Lbs. [kg]	Shipping Lbs. [kg]
018	23 5/8 [600]	23 5/8 [600]	24 1/4 [616]	126 [57.2]	134 [60.8]
024	23 5/8 [600]	23 5/8 [600]	24 1/4 [616]	127 [57.6]	135 [61.2]
030	27 5/8 [702]	27 5/8 [702]	24 1/4 [616]	144 [65.3]	154 [69.9]
036	31 5/8 [803]	31 5/8 [803]	27 15/16 [710]	166 [75.3]	178 [80.7]
042	31 5/8 [803]	31 5/8 [803]	27 15/16 [710]	194 [88]	206 [93.4]
048	31 5/8 [803]	31 5/8 [803]	35 15/16 [913]	222 [100.7	233 [105]
060	31 5/8 [803]	31 5/8 [803]	35 15/16 [913]	227 [103]	238 [108]
065	31 5/8 [803]	31 5/8 [803]	35 15/16 [913]	227 [103]	238 [108]

ENGINEERING FEATURES

RHLH Air Handling Units

- Attractive Powder coated cabinet.
- Rugged steel body construction, designed for added strength and rigidity.
- Self-centering blower mounting arrangement.
- Multi Speed Internally protected ultra-high efficiency, low RPM motors.
- Thermostatic Expansion valve as standard feature.
- Metallic blower and blower housing as standard feature.
- Brass distributor for uniform distribution of refrigerant.
- Antifreeze protection on coils integrated with unit controller. (Increased compressor life)
- Easily removable drain pan for cleaning purpose.
- Rolled and rigid brackets for unit suspensions.
- Easily removable fan deck assembly for quick service.
- All field accessible components on one side of unit.
- Supply duct flanges as standard on all units.
- Easily removable filter for quick cleaning operation.
- Micro Processor based unit controller
- No need of external thermostat
- High Pressure protection
- Low Pressure Protection
- Built in Time Delay for compressor
- Over trip lockout

ELECTRICAL & OTHER PERFORMANCE DATA

SAGL /RHLH

Model Number	Phase-Hertz Voltage	Comp RLA	Comp LRA	Motor FLA	MCA	Fuse Sizes		Outdoor coil area Sq.Ft (M^2)	Rows CFM (L/S)	R410A Charge Weight (Oz)	Sound Rating db(A)
						Min	Max				
SAGL -018TA	1-50-220/240	7.9	44	0.6	12	15	15	11.06(1.03)	1 1573 (742)	61	70
SAGL -024TA	1-50-220/240	10	52	0.6	17	30	30	11.06(1.03)	1 1573 (742)	70	70
SAGL -030TA	1-50-220/240	12.5	60	0.8	19	30	30	13.72(1.27)	1 2362 (1114)	78	69
SAGL -036TA	1-50-220/240	15	67	0.8	23	30	30	16.39(1.52)	1 2511 (1184)	95	71
SAGL -042TA	1-50-220/240	17.9	87	1.2	29	35	35	16.39(1.52)	1 2880(1358)	104	72
SAGL -042NA	3-50-380/415	6.6	44	1	12	15	15	16.39(1.52)	1 2880(1358)	101	72
SAGL -048NA	3-50-380/415	6.9	41	1	12	15	15	21.85(2.03)	1 2975(1403)	142	72
SAGL -060NA	3-50-380/415	8.9	52	1	15	20	20	21.85(2.03)	1 2975(1403)	172	74
SAGL -065NA	3-50-380/415	11.8	75	1	15	20	20	21.85(2.03)	1 2975(1403)	172	74

AIR FLOW PERFORMANCE DATA

RHLH-TM Series Air Handlers

AIR FLOW PERFORMANCE DATA -RHLH-TM/TMH 50Hz

MODEL	BLOWER MOTOR SPEED	PERFORMANCE	CFM @ EXTERNAL STATIC PRESSURE (Inches of Water)					
			0	0.1	0.15	0.2	0.3	0.4
RHLH-018TM	5	CFM	460	350	300	165	-	-
		POWER	50	45	40	35	-	-
	4	CFM	515	440	345	200	-	-
		POWER	55	50	45	40	-	-
	3	CFM	585	515	400	250	-	-
		POWER	65	60	50	45	-	-
	2	CFM	690	610	540	365	-	-
		POWER	80	70	65	60	-	-
	1	CFM	825	715	635	415	-	-
		POWER	95	85	80	70	-	-
RHLH-018TMH	5	CFM	850	750	700	630	460	
		POWER	120	115	110	105	100	
	4	CFM	890	795	745	695	520	-
		POWER	130	125	120	115	110	-
	3	CFM	930	840	795	740	585	-
		POWER	140	135	130	125	120	-
	2	CFM	980	890	845	790	640	-
		POWER	150	145	140	135	130	-
	1	CFM	1030	945	900	845	690	-
		POWER	170	160	155	150	140	-
RHLH-024TM	3	CFM	890	745	645	425	-	-
		POWER	90	80	70	60	-	-
	2	CFM	925	770	665	450	-	-
		POWER	95	85	75	65	-	-
	1	CFM	955	790	685	470	-	-
		POWER	100	90	80	70	-	-
RHLH-024TMH	5	CFM	850	750	700	630	460	
		POWER	120	115	110	105	100	
	4	CFM	890	795	745	695	520	-
		POWER	130	125	120	115	110	-
	3	CFM	930	840	795	740	585	-
		POWER	140	135	130	125	120	-
	2	CFM	980	890	845	790	640	-
		POWER	150	145	140	135	130	-
	1	CFM	1030	945	900	845	690	-
		POWER	170	160	155	150	140	-
RHLH-030TM	5	CFM	850	750	700	630	460	
		POWER	120	115	110	105	100	
	4	CFM	890	795	745	695	520	-
		POWER	130	125	120	115	110	-
	3	CFM	930	840	795	740	585	-
		POWER	140	135	130	125	120	-
	2	CFM	980	890	845	790	640	-
		POWER	150	145	140	135	130	-
	1	CFM	1030	945	900	845	690	-
		POWER	170	160	155	150	140	-
RHLH-036TM	5	CFM	1360	1240	1170	1075	655	-
		POWER	200	170	160	140	100	-
	4	CFM	1440	1300	1225	1125	720	-
		POWER	210	180	170	150	110	-
	3	CFM	1540	1360	1275	1170	750	-
		POWER	220	190	180	160	120	-
	2	CFM	1600	1430	1330	1225	845	-
		POWER	230	200	190	180	140	-
	1	CFM	1680	1490	1400	1290	890	-
			275	260	250	240	210	-

AIR FLOW PERFORMANCE DATA -RHLH-TM/TMH 50Hz

MODEL	BLOWER MOTOR SPEED	PERFORMANCE	CFM @ EXTERNAL STATIC PRESSURE (Inches of Water)					
			0	0.1	0.15	0.2	0.3	0.4
RHLH-042TM	5	CFM	1355	1225	1145	1045	615	-
		POWER	190	160	150	140	95	-
	4	CFM	1420	1280	1200	1100	635	-
		POWER	200	180	165	150	100	-
	3	CFM	1485	1330	1250	1145	705	-
		POWER	210	185	170	160	120	-
	2	CFM	1560	1385	1290	1185	720	-
		POWER	220	190	180	170	130	-
	1	CFM	1635	1455	1355	1235	785	-
		POWER	270	250	240	230	190	-
RHLH-048TM	5	CFM	1250	1220	1195	1150	930	490
		POWER	240	220	215	200	160	110
	4	CFM	1400	1380	1355	1315	1055	565
		POWER	260	250	240	230	180	120
	3	CFM	1550	1525	1495	1450	1190	645
		POWER	300	280	265	250	200	135
	2	CFM	1900	1795	1720	1645	1350	755
		POWER	360	320	300	280	230	160
	1	CFM	2280	2080	1980	1870	1615	1055
		POWER	415	380	360	340	300	245
RHLH-054TM	5	CFM	1250	1220	1195	1150	930	490
		POWER	240	220	215	200	160	110
	4	CFM	1400	1380	1355	1315	1055	565
		POWER	260	250	240	230	180	120
	3	CFM	1550	1525	1495	1450	1190	645
		POWER	300	280	265	250	200	135
	2	CFM	1900	1795	1720	1645	1350	755
		POWER	360	320	300	280	230	160
	1	CFM	2280	2080	1980	1870	1615	1055
		POWER	415	380	360	340	300	245
RHLH-065TM	5	CFM	1710	1680	1650	1590	1320	790
		POWER	295	270	260	245	200	140
	4	CFM	1930	1865	1815	1740	1430	870
		POWER	340	310	300	280	230	160
	3	CFM	2140	2025	1955	1865	1570	950
		POWER	380	345	330	310	260	190
	2	CFM	2350	2185	2095	1990	1705	1030
		POWER	430	400	380	360	320	250
	1	CFM	2500	2300	2190	2070	1780	1090
		POWER	505	480	460	450	410	360

*	Airflow at dry coil condition
	Highlighted speeds are connected from factory

Sound Testing Arrangement

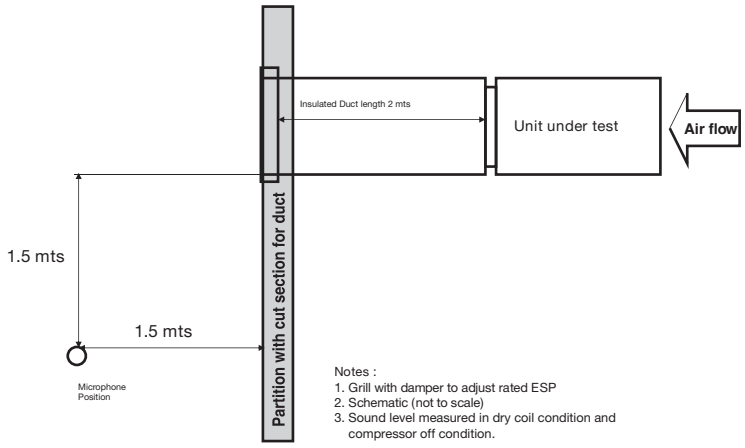

Notes :
1. Grill with damper to adjust rated ESP
2. Schematic (not to scale)
3. Sound level measured in dry coil condition and compressor off condition.

SOUND LEVEL DATA

Model	Speed	1/1 Octave Sound Pressure (dB, ref 20 µPa)								Overall	
		63 Hz	125 Hz	250 Hz	500 Hz	1 KHz	2 KHz	4 KHz	8 KHz	dB	dBA
RHLH-018TM	1	48	45	42	39	36	27	20	15	56	41
	2	49	43	41	38	34	26	18	14	56	39
	3	48	42	40	37	33	25	17	14	55	38
	4	48	42	39	37	33	25	18	14	55	38
	5	44	41	38	36	33	26	18	14	55	38
RHLH-024TM	1	48	50	43	41	35	23	17	14	56	42
	2	50	49	43	41	34	25	19	14	55	41
	3	49	49	42	40	34	24	18	14	55	41
RHLH-030TM	1	51	51	52	49	40	28	21	17	60	49
	2	51	51	51	48	39	31	24	16	59	48
	3	51	50	50	47	38	29	22	16	59	47
	4	51	50	49	46	39	31	24	16	58	46
	5	51	49	48	44	37	29	22	15	58	45
RHLH-036TM	1	53	57	51	46	42	35	30	21	61	49
	2	51	56	51	45	42	34	30	20	60	48
	3	51	55	50	45	41	34	29	20	60	47
	4	51	54	49	44	41	33	28	19	59	46
	5	49	52	48	43	41	34	29	19	58	46
RHLH-042TM	1	52	53	51	44	42	36	31	21	59	47
	2	50	54	49	44	41	34	29	19	58	47
	3	51	52	48	43	41	34	30	20	59	46
	4	52	51	48	43	40	32	27	18	58	45
	5	52	50	47	42	40	33	28	18	57	45
RHLH-048TM	1	56	61	53	51	45	42	39	29	65	53
	2	54	59	51	49	44	40	36	26	66	51
	3	57	58	49	47	42	39	35	25	67	49
	4	53	56	48	47	41	38	33	23	63	48
	5	53	55	46	45	41	37	33	22	62	47
RHLH-054TM	1	56	61	53	51	45	42	39	29	65	53
	2	54	59	51	49	44	40	36	26	66	51
	3	57	58	49	47	42	39	35	25	67	49
	4	53	56	48	47	41	38	33	23	63	48
	5	53	55	46	45	41	37	33	22	62	47
RHLH-065TM	1	56	59	56	52	46	41	36	29	63	53
	2	55	58	55	51	46	41	36	29	63	53
	3	55	56	53	49	46	43	39	31	62	52
	4	56	56	52	49	45	43	38	30	63	51
	5	54	55	51	48	45	42	37	29	62	51

PHYSICAL AND ELECTRICAL DATA

PHYSICAL & ELECTRICAL DATA

Date :	3/Apr/2024	Rev : 08

TABLE FOR TECHNICAL DATA

AIR HANDLING UNIT MODEL				**RHLH-018TM**	**RHLH-024TM**	**RHLH-030TM**	**RHLH-036TM**	**RHLH-042TM**	**RHLH-042TM**	**RHLH-048TM**	**RHLH-042TM**	**RHLH-054TM**	**RHLH-065TM**	**RHLH-018TMH**	**RHLH-024TMH**	**RHLH-065TM**
CONDENSING UNIT MODEL				**SAGL-018TA**	**SAGL-024TA**	**SAGL-030TA**	**SAGL-036TA**	**SAGL-036TA**	**SAGL-042TA**	**SAGL-042TA**	**SAGL-042NA**	**SAGL-048NA**	**SAGL-060NA**	**SAGL-018TA**	**SAGL-024TA**	**SAGL-061NA**
AMBIENT TEMP 35 °C	EVAP ENTERING AIR TEMP.	27 DB / 19 WB °C	TMBH	15.4	20.7	24.0	28.8	29.6	34.9	36.2	35.1	40.6	56.8	15.4	20.7	56.8
			SMBH	13.0	17.6	20.0	24.4	25.4	28.5	30.2	28.5	34.0	45.9	13.0	17.6	45.9
		24.4 DB / 17.2 WB °C	TMBH	14.4	19.4	22.7	27.3	28.4	33.5	34.1	33.3	38.1	54.2	14.4	19.4	54.2
			SMBH	12.2	16.5	18.8	23.0	24.1	27.1	28.6	27.0	32.0	43.8	12.2	16.5	43.8
AMBIENT TEMP 46 °C	EVAP ENTERING AIR TEMP.	29 DB / 19 WB °C	TMBH	13.8	18.9	21.2	25.8	27.4	30.9	31.7	31.9	37.3	50.6	13.8	18.9	49.0
			SMBH	13.1	18.3	20.7	24.7	26.1	30.1	30.9	30.2	35.5	49.0	13.1	18.3	48.0
		24.4 DB / 17.2 WB °C	TMBH	12.4	16.8	19.7	23.7	24.6	29.8	29.9	29.6	33.6	47.1	12.4	16.8	47.1
			SMBH	11.0	15.2	17.6	21.0	21.9	25.2	26.7	25.2	29.6	40.6	11.0	15.2	40.6
AIR FLOW PERFORMANCE (DRY COIL)		LOW	CFM	440	745	840	1170	1250	1250	1195	1250	1355	1740	750	750	1740
		MED		515	770	890	1225	1290	1290	1355	1290	1495	1865	795	795	1865
		HIGH		610	790	945	1275	1355	1355	1495	1355	1720	1990	840	840	1990
NOISE LEVEL		LOW	dBA	37.8	40.8	46.5	45.8	45.9	45.9	46.9	45.9	48.1	51.3	44.8	44.8	51.3
		MED		38.8	41.3	47.5	46.3	46.7	46.7	48.1	46.7	49.1	52	46.3	46.3	52
		HIGH		40.6	41.7	48.8	47.1	47.4	47.4	49.1	47.4	50.7	52.6	46.5	46.5	52.6
EXTERNAL STATIC PRESSURE (ESP)			IN (Pa)	0.1 (25)	0.1 (25)	0.1 (25)	0.15 (37)	0.15 (37)	0.15 (37)	0.15 (37)	0.15 (37)	0.15 (37)	0.2 (50)	0.1 (25)	0.1 (25)	0.2 (50)
NUMBER OF COMPRESSORS				1	1	1	1	1	1	1	1	1	1	1	1	1
NUMBER OF REFRIGERANT CIRCUIT FOR AHU				1	1	1	1	1	1	1	1	1	1	1	1	1
EXPANSION DEVICE/REFRIGERANT - R410A				Thermostatic Expansion Valve												
ELECTRICAL DATA	POWER SUPPLY	AIR HANDLING UNIT	PH-HZ-VOLT	1-50-230	1-50-230	1-50-230	1-50-230	1-50-230	1-50-230	1-50-230	1-50-230	1-50-230	1-50-230	220-240/50/1	220-240/50/1	1-50-230
		CONDENSING UNIT		1-50-230	1-50-230	1-50-230	1-50-230	1-50-230	1-50-230	1-50-230	3-50-400	3-50-400	3-50-400	220-240/50/1	220-240/50/1	3-50-400
	POWER INPUT	AIR HANDLING UNIT	KW	0.069	0.10	0.16	0.17	0.23	0.23	0.23	0.23	0.30	0.36	0.13	0.14	0.36
		CONDENSING UNIT		1.18	1.63	1.86	2.23	2.24	2.66	2.70	2.90	3.04	4.71	1.12	1.60	4.39
	CIRCUIT BREAKER SIZE	AIR HANDLING UNIT	AMPS	15	15	15	15	15	15	15	15	15	15	15	15	15
		CONDENSING UNIT		25	25	32	32	32	32	32	20	20	25	25	25	25
	FULL LOAD CURRENT	AIR HANDLING UNIT	AMPS	0.3	0.4	0.7	0.9	1.4	1.4	1.4	1.4	1.4	1.6	0.4	0.4	1.6
		CONDENSING UNIT		5.1	7.2	8.2	10.3	10.3	12.2	12.2	5.4	5.4	8.1	5.0	7.2	8.1
COIL FACE AREA		AIR HANDLING UNIT	SQ. FT	3.6	3.6	3.6	4.5	4.5	4.5	6.1	4.5	6.1	8.2	3.6	3.6	8.2
		CONDENSING UNIT		11.1	11.1	13.7	16.4	16.4	16.4	16.4	16.4	21.9	21.9	11.1	11.1	21.9
NO OF FANS		AIR HANDLING UNIT	NOS.	2	2	2	2	2	2	2	2	2	2	2	2	2
		CONDENSING UNIT		1	1	1	1	1	1	1	1	1	1	1	1	1
NET WEIGHT		INDOOR UNIT	KG	37	37	42	52	52	52	68	52	68	76	37	37	76
		OUTDOOR UNIT	KG	57	58	65	75	75	68	68	88	101	103	57	58	103

GENERAL ARRANGEMENT DRAWING

Indoor Unit

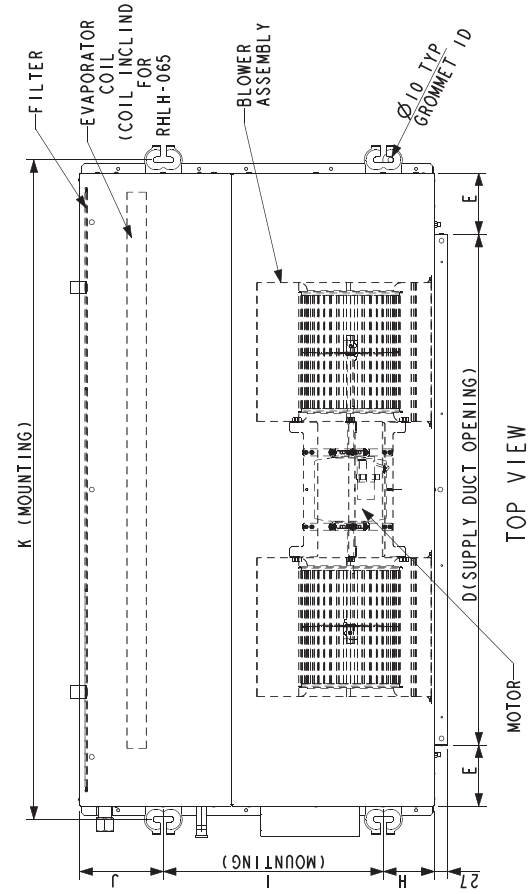

TOP VIEW

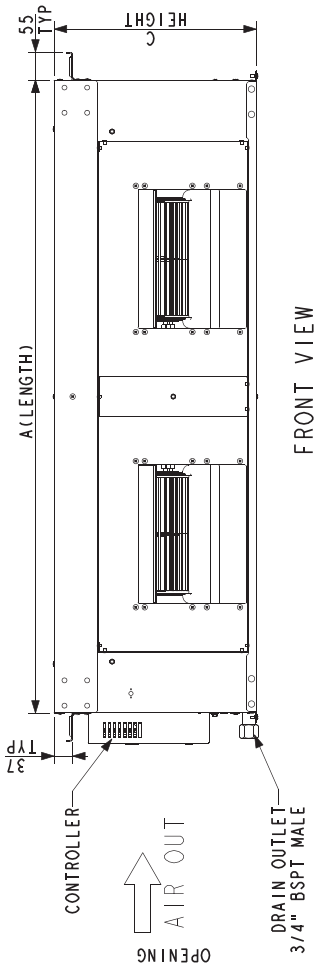

FRONT VIEW

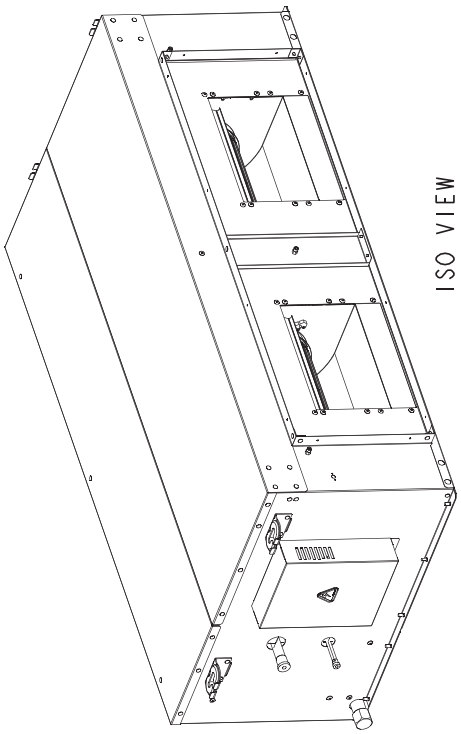

ISO VIEW

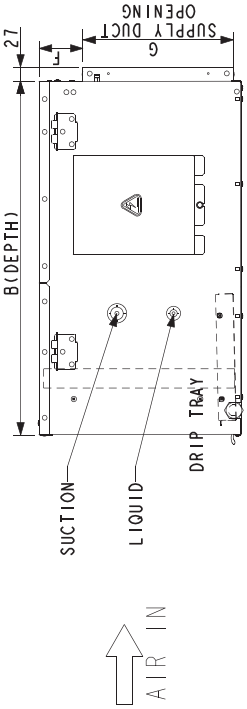

SIDE VIEW

MODEL - 50Hz	A	B	C	D	E	F	G	H	I	J	K	SUC. SIZE	LIQ. SIZE
RHLH-018/024/030	1252	600	310	1010	121	52	242	75	390	135	1304	3/4"	3/8"
RHLH-036/42	1252	700	400	1010	121	87	297	100	435	165	1304	3/4"	3/8"
RHLH-048/54	1652	700	400	1200	226	87	297	100	435	165	1704	7/8"	3/8"
RHLH-065	1652	900	400	1200	226	87	297	126	557	217	1704	7/8"	3/8"

All dimensions are in mm

PERFORMANCE DATA

MODEL			RHLH-018TM/SAGL-018TA									RHLH-024TM/SAGL-024TA								
INDOOR TEMP OF			80.6° FDB / 71.0° FWB			80.6° FDB / 66.2°FWB			80.6° FDB / 63.0° FWB			80.6° FDB / 71.0° FWB			80.6° FDB / 66.2° FWB			80.6° FDB / 63.0° FWB		
			High	Med	Low	High	Med	Low	High	Med	Low	High	Med	Low	High	Med	Low	High	Med	Low
DEPRESSION RATIO			0.2	0.22	0.24	0.2	0.22	0.24	0.2	0.22	0.24	0.19	0.21	0.23	0.19	0.21	0.23	0.19	0.21	0.23
CFM AIR VOL.			610	515	440	610	515	440	610	515	440	790	770	745	790	770	745	790	770	745
OUTDOOR TEMPERATURE	75° F	TMBH	18.0	17.7	17.4	17.0	16.6	16.2	16.1	15.7	15.4	24.9	24.7	24.6	23.0	22.9	22.8	21.8	21.7	21.6
		SMBH	10.9	10.4	9.9	13.8	12.9	12.1	15.6	14.5	13.5	14.9	14.8	14.6	18.3	18.1	17.9	20.7	20.4	20.1
		Power	0.99	0.98	0.97	0.99	0.98	0.96	0.98	0.97	0.96	1.39	1.39	1.38	1.38	1.37	1.37	1.37	1.37	1.36
	80°F	TMBH	17.6	17.3	17.0	16.7	16.3	15.9	15.8	15.4	15.1	24.3	24.2	24.1	22.4	22.3	22.2	21.2	21.1	21.1
		SMBH	10.7	10.2	9.8	13.6	12.7	11.9	15.4	14.3	13.3	14.7	14.6	14.4	18.1	17.9	17.6	20.4	20.1	19.8
		Power	1.05	1.04	1.03	1.05	1.04	1.02	1.04	1.03	1.02	1.48	1.47	1.47	1.46	1.45	1.45	1.45	1.44	1.44
	85°F	TMBH	17.1	16.9	16.6	16.3	15.9	15.6	15.4	15.1	14.8	23.7	23.6	23.5	21.9	21.8	21.7	20.6	20.6	20.5
		SMBH	10.4	10.0	9.6	13.4	12.5	11.7	15.2	14.2	13.2	14.4	14.3	14.1	17.8	17.6	17.4	20.1	19.9	19.6
		Power	1.12	1.11	1.09	1.11	1.10	1.09	1.11	1.09	1.08	1.57	1.56	1.55	1.55	1.54	1.53	1.53	1.53	1.52
	90°F	TMBH	16.6	16.4	16.2	15.9	15.5	15.2	15.1	14.7	14.4	23.1	23.0	22.9	21.3	21.2	21.2	20.1	20.0	19.9
		SMBH	10.2	9.8	9.4	13.2	12.3	11.6	15.0	14.0	13.0	14.2	14.1	13.9	17.6	17.4	17.2	19.9	19.6	19.3
		Power	1.18	1.17	1.16	1.18	1.17	1.15	1.17	1.16	1.15	1.66	1.66	1.65	1.64	1.63	1.63	1.62	1.62	1.61
	95°F	TMBH	16.1	16.0	15.4	15.4	15.1	14.8	14.7	14.3	14.0	22.4	22.4	22.3	20.7	20.7	20.6	19.6	19.5	19.4
		SMBH	9.9	9.6	13.0	12.9	12.1	11.4	14.7	13.8	12.8	14.0	13.8	13.7	17.5	17.2	16.9	19.6	19.5	19.1
		Power	1.25	1.25	1.25	1.25	1.24	1.22	1.24	1.23	1.22	1.77	1.76	1.75	1.74	1.73	1.73	1.72	1.72	1.71
	100° F	TMBH	15.5	15.4	15.2	14.9	14.6	14.4	14.3	13.9	13.6	21.8	21.7	21.6	20.1	20.1	20.0	19.1	19.0	18.8
		SMBH	9.6	9.3	8.9	12.7	11.9	11.2	14.3	13.5	12.6	13.7	13.6	13.4	17.1	16.9	16.6	19.1	19.0	18.8
		Power	1.33	1.32	1.31	1.32	1.31	1.30	1.32	1.30	1.29	1.87	1.87	1.86	1.84	1.84	1.83	1.83	1.82	1.81
	105° F	TMBH	14.9	14.8	14.6	14.4	14.2	13.9	13.9	13.5	13.2	21.1	21.1	21.0	19.5	19.5	19.4	18.6	18.5	18.3
		SMBH	9.3	9.0	8.7	12.4	11.6	10.9	13.9	13.2	12.4	13.4	13.3	13.2	16.8	16.6	16.4	18.6	18.5	18.3
		Power	1.41	1.40	1.38	1.40	1.39	1.38	1.40	1.38	1.37	1.99	1.98	1.98	1.96	1.95	1.95	1.94	1.94	1.93
	110°F	TMBH	14.3	14.2	14.1	13.9	13.7	13.4	13.4	13.0	12.7	20.4	20.4	20.3	18.8	18.8	18.7	18.1	18.0	17.9
		SMBH	9.0	8.7	8.4	12.1	11.4	10.7	13.4	13.0	12.2	13.2	13.0	12.9	16.5	16.4	16.1	18.1	18.0	17.9
		Power	1.49	1.48	1.47	1.49	1.47	1.46	1.48	1.47	1.45	2.11	2.10	2.10	2.08	2.07	2.07	2.07	2.06	2.05
	115°F	TMBH	13.6	13.6	13.5	13.3	13.1	12.9	13.0	12.6	12.3	19.7	19.7	19.6	18.2	18.2	18.1	17.6	17.5	17.4
		SMBH	8.6	8.4	8.1	11.8	11.1	10.4	13.0	12.6	11.9	12.9	12.8	12.6	16.3	16.1	15.9	17.6	17.5	17.4
		Power	1.58	1.57	1.56	1.57	1.56	1.55	1.57	1.56	1.54	2.24	2.23	2.23	2.21	2.20	2.19	2.20	2.19	2.18
	120° F	TMBH	13.0	13.0	12.9	12.7	12.6	12.4	12.5	12.2	11.8	19.0	18.9	18.9	17.5	17.5	17.4	17.0	17.0	16.8
		SMBH	8.3	8.0	7.8	11.4	10.8	10.2	12.5	12.2	11.6	12.6	12.5	12.3	16.0	15.8	15.6	17.0	17.0	16.8
		Power	1.67	1.66	1.65	1.67	1.65	1.64	1.66	1.65	1.64	2.37	2.36	2.36	2.34	2.34	2.33	2.33	2.33	2.32
	125° F	TMBH	12.4	12.3	12.3	12.2	12.1	11.9	12.0	11.7	11.3	18.2	18.2	18.1	16.8	16.8	16.7	16.5	16.4	16.3
		SMBH	7.9	7.7	7.5	11.1	10.4	9.9	12.0	11.7	11.3	12.3	12.2	12.0	15.7	15.6	15.3	16.5	16.4	16.3
		Power	1.77	1.76	1.74	1.76	1.75	1.74	1.76	1.75	1.73	2.51	2.50	2.50	2.48	2.48	2.47	2.48	2.47	2.46

MODEL			RHLH-030TM/SAGL-030TA									RHLH-036TM/SAGL-036TA								
INDOOR TEMP OF			80.6° FDB / 71.0° FWB			80.6° FDB / 66.2°FWB			80.6° FDB / 63.0° FWB			80.6° FDB / 71.0° FWB			80.6° FDB / 66.2° FWB			80.6° FDB / 63.0° FWB		
			High	Med	Low	High	Med	Low	High	Med	Low	High	Med	Low	High	Med	Low	High	Med	Low
DEPRESSION RATIO			0.15	0.17	0.19	0.15	0.17	0.19	0.15	0.17	0.19	0.25	0.27	0.29	0.25	0.27	0.29	0.25	0.27	0.29
CFM AIR VOL.			945	890	840	945	890	840	945	890	840	1275	1225	1170	1275	1225	1170	1275	1225	1170
OUTDOOR TEMPERATURE	75° F	TMBH	28.1	27.9	27.7	26.2	26.0	25.8	24.9	24.7	24.6	33.5	33.3	33.3	31.9	31.7	31.6	30.4	30.3	30.3
		SMBH	16.7	16.4	16.1	20.5	20.1	19.6	23.2	22.6	22.1	19.9	19.8	19.6	25.2	24.8	24.5	28.8	28.3	27.9
		Power	1.67	1.65	1.64	1.67	1.65	1.64	1.66	1.65	1.64	1.90	1.89	1.88	1.89	1.88	1.87	1.88	1.86	1.85
	80°F	TMBH	27.5	27.4	27.1	25.7	25.5	25.3	24.4	24.2	24.1	32.6	32.5	32.4	31.1	31.0	30.9	29.7	29.6	29.5
		SMBH	16.4	16.1	15.8	20.3	19.8	19.4	23.0	22.3	21.9	19.5	19.3	19.1	24.8	24.4	24.1	28.4	28.0	27.5
		Power	1.75	1.73	1.72	1.75	1.73	1.72	1.74	1.72	1.71	2.02	2.01	2.00	2.01	1.99	1.98	1.99	1.98	1.97
	85°F	TMBH	26.9	26.8	26.6	25.2	25.0	24.8	23.9	23.8	23.6	31.7	31.6	31.5	30.3	30.3	30.1	29.0	28.9	28.7
		SMBH	16.1	15.8	15.6	20.0	19.6	19.1	22.7	22.1	21.6	19.0	18.9	18.7	24.3	24.1	23.7	28.1	27.6	27.1
		Power	1.83	1.82	1.81	1.83	1.81	1.80	1.82	1.81	1.80	2.14	2.13	2.12	2.13	2.12	2.11	2.12	2.10	2.09
	90°F	TMBH	26.2	26.1	25.9	24.6	24.4	24.3	23.3	23.2	23.1	30.7	30.7	30.6	29.5	29.4	29.3	28.2	28.2	28.1
		SMBH	15.8	15.6	15.3	20.0	19.3	18.9	22.4	21.8	21.3	18.6	18.4	18.3	23.9	23.6	23.3	27.6	27.2	26.8
		Power	1.93	1.91	1.90	1.92	1.91	1.90	1.92	1.90	1.89	2.27	2.26	2.25	2.26	2.25	2.23	2.24	2.23	2.22
	95°F	TMBH	25.6	25.4	25.3	24.0	23.8	23.6	22.7	22.6	22.4	29.8	29.8	29.7	28.7	28.6	28.5	27.5	27.4	27.3
		SMBH	15.5	15.3	15.0	19.9	19.0	18.6	22.1	21.5	21.0	18.1	17.9	17.8	24.1	23.1	22.8	27.2	26.9	26.2
		Power	2.03	2.01	2.00	2.02	2.01	2.00	2.02	2.00	1.99	2.41	2.40	2.38	2.39	2.38	2.37	2.38	2.37	2.36
	100° F	TMBH	24.9	24.7	24.6	23.3	23.2	23.0	22.1	22.0	21.8	28.8	28.7	28.7	27.8	27.7	27.6	26.7	26.5	26.4
		SMBH	15.2	14.9	14.7	19.1	18.7	18.3	21.8	21.3	20.8	17.6	17.4	17.3	22.9	22.6	22.3	26.6	26.3	25.9
		Power	2.14	2.12	2.11	2.14	2.12	2.11	2.13	2.11	2.10	2.55	2.54	2.53	2.54	2.53	2.52	2.52	2.51	2.50
	105° F	TMBH	24.1	24.0	23.9	22.6	22.5	22.4	21.4	21.3	21.2	27.7	27.7	27.6	26.9	26.8	26.7	25.9	25.7	25.6
		SMBH	14.9	14.6	14.4	18.8	18.4	18.0	21.4	21.0	20.4	17.0	16.9	16.8	22.3	22.1	21.8	25.9	25.7	25.4
		Power	2.26	2.24	2.23	2.26	2.24	2.23	2.25	2.23	2.22	2.70	2.69	2.68	2.69	2.68	2.67	2.68	2.67	2.66
	110°F	TMBH	23.3	23.2	23.1	21.9	21.8	21.6	20.9	20.6	20.5	26.7	26.6	26.4	25.9	25.9	25.8	25.0	24.9	24.8
		SMBH	14.5	14.3	14.0	18.4	18.0	17.6	20.9	20.6	20.1	16.5	16.4	16.0	21.7	21.5	21.2	25.0	24.9	24.8
		Power	2.39	2.37	2.36	2.38	2.36	2.35	2.37	2.36	2.35	2.87	2.86	2.84	2.86	2.85	2.84	2.85	2.84	2.82
	115°F	TMBH	22.5	22.4	22.3	21.2	21.0	20.9	20.3	20.0	19.8	25.6	25.5	25.5	25.0	24.9	24.8	24.2	24.1	23.9
		SMBH	14.1	13.9	13.7	18.1	17.6	17.2	20.3	20.0	19.8	15.9	15.8	15.6	21.1	20.8	20.6	24.2	24.1	23.9
		Power	2.52	2.51	2.50	2.52	2.50	2.49	2.51	2.49	2.48	3.04	3.03	3.02	3.04	3.02	3.01	3.03	3.01	3.00
	120° F	TMBH	21.6	21.5	21.4	20.4	20.3	20.2	19.6	19.4	19.2	24.4	24.4	24.4	23.9	23.9	23.8	23.3	23.2	23.1
		SMBH	13.7	13.5	13.3	17.6	17.2	16.9	19.6	19.4	19.2	15.3	15.1	15.1	20.4	20.2	19.9	23.3	23.2	23.1
		Power	2.67	2.65	2.64	2.66	2.64	2.63	2.65	2.64	2.63	3.23	3.22	3.21	3.22	3.21	3.20	3.22	3.21	3.19
	125° F	TMBH	20.8	20.6	20.6	19.6	19.5	19.4	18.9	18.8	18.5	23.3	23.2	23.2	22.8	22.8	22.7	22.4	22.3	22.2
		SMBH	13.3	13.1	12.9	17.2	16.9	16.5	18.9	18.8	18.5	14.6	14.5	14.4	19.7	19.5	19.3	22.4	22.3	22.2
		Power	2.82	2.80	2.79	2.81	2.80	2.78	2.81	2.79	2.78	3.43	3.42	3.41	3.43	3.42	3.41	3.42	3.41	3.40

Power: Total Unit Input Power (kW)

DR: Depression Ratio

dbE: Entering Air Temperature in ^{0}F

When the entering air dry bulb temperature is other than 80.6^{0}F, adjust the sensible capacity from the table by adding 1.1 x CFM X (1-DR) X (dbE-80.6)

PERFORMANCE DATA

MODEL			RHLH-042TM/SAGL-036TA									RHLH-042TM/SAGL-042TA								
INDOOR TEMP OF			80.6° FDB / 71.0° FWB			80.6° FDB / 66.2°FWB			80.6° FDB / 63.0° FWB			80.6° FDB / 71.0° FWB			80.6° FDB / 66.2° FWB			80.6° FDB / 63.0° FWB		
			High	Med	Low	High	Med	Low	High	Med	Low	High	Med	Low	High	Med	Low	High	Med	Low
DEPRESSION RATIO			0.20	0.22	0.24	0.20	0.22	0.24	0.20	0.22	0.24	0.20	0.22	0.24	0.20	0.22	0.24	0.20	0.22	0.24
CFM AIR VOL.			1355	1290	1250	1355	1290	1250	1355	1290	1250	1355	1290	1250	1355	1290	1250	1355	1290	1250
OUTDOOR TEMPERATURE	75°F	TMBH	34.5	34.4	34.4	33.2	33.2	33.0	31.7	31.6	31.4	41.6	41.4	41.3	38.7	38.5	38.3	36.4	36.2	36.2
		SMBH	20.8	20.7	20.5	27.3	27.0	26.6	31.7	31.3	30.7	24.9	24.5	24.3	30.9	30.2	29.8	35.1	34.3	33.7
		Power	1.98	1.97	1.97	1.97	1.96	1.95	1.95	1.94	1.94	2.33	2.27	2.26	2.31	2.25	2.24	2.30	2.24	2.23
	80°F	TMBH	33.5	33.5	33.4	32.4	32.3	32.2	31.1	30.9	30.8	40.7	40.6	40.6	38.0	37.7	37.5	35.8	35.6	35.4
		SMBH	20.3	20.2	20.0	26.8	26.5	26.2	31.1	30.9	30.5	24.5	24.1	24.1	30.5	29.9	29.5	34.8	34.0	33.4
		Power	2.10	2.09	2.08	2.09	2.07	2.07	2.07	2.06	2.05	2.46	2.40	2.39	2.44	2.38	2.37	2.43	2.37	2.36
	85°F	TMBH	32.5	32.5	32.4	31.6	31.5	31.4	30.4	30.3	30.0	39.7	39.5	39.4	37.1	37.0	36.7	35.0	34.8	34.7
		SMBH	19.8	19.7	19.5	26.3	26.0	25.6	30.4	30.3	30.0	24.1	23.7	23.5	30.1	29.6	29.1	34.5	33.6	33.1
		Power	2.22	2.21	2.20	2.21	2.20	2.19	2.20	2.19	2.18	2.60	2.54	2.53	2.58	2.53	2.51	2.57	2.51	2.50
	90°F	TMBH	31.5	31.4	31.4	30.7	30.6	30.5	29.7	29.6	29.3	38.5	38.4	38.2	36.1	36.0	35.8	34.1	33.9	33.7
		SMBH	19.2	19.2	19.0	26.1	25.5	25.2	29.7	29.6	29.3	23.5	23.2	23.0	29.7	29.1	28.7	34.0	33.2	32.6
		Power	2.35	2.34	2.33	2.34	2.33	2.32	2.33	2.31	2.31	2.75	2.69	2.68	2.73	2.67	2.66	2.72	2.66	2.65
	95°F	TMBH	30.4	30.3	30.3	29.7	29.7	29.6	28.9	28.8	28.6	37.3	37.1	37.1	34.9	34.8	34.7	33.2	32.9	32.8
		SMBH	18.7	18.6	18.5	26.0	24.9	24.6	28.9	28.8	28.6	23.0	22.7	22.4	28.5	28.4	28.2	33.2	32.7	32.3
		Power	2.48	2.47	2.46	2.47	2.46	2.45	2.46	2.45	2.44	2.91	2.85	2.84	2.89	2.83	2.82	2.88	2.82	2.81
	100° F	TMBH	29.3	29.2	29.2	28.8	28.7	28.6	28.1	27.9	27.8	36.1	35.9	35.8	34.1	33.9	33.7	32.4	32.0	31.8
		SMBH	18.1	18.0	17.9	24.5	24.3	24.0	28.1	27.9	27.8	22.4	22.1	21.9	28.4	28.1	27.7	32.4	32.0	31.7
		Power	2.62	2.61	2.61	2.62	2.61	2.60	2.61	2.60	2.59	3.08	3.02	3.01	3.07	3.00	2.99	3.05	2.99	2.98
	105° F	TMBH	28.1	28.1	28.1	27.7	27.7	27.6	27.2	27.1	26.9	34.8	34.7	34.5	32.9	32.8	32.6	31.5	31.1	30.9
		SMBH	17.5	17.3	17.3	23.8	23.6	23.3	27.2	27.1	26.9	21.8	21.5	21.3	28.1	27.6	27.2	31.5	31.1	30.9
		Power	2.77	2.76	2.76	2.77	2.76	2.75	2.76	2.75	2.74	3.27	3.20	3.19	3.25	3.19	3.18	3.24	3.17	3.16
	110°F	TMBH	26.9	26.9	26.9	26.7	26.6	26.6	26.2	26.2	26.0	33.5	33.3	33.3	31.8	31.7	31.5	30.6	30.3	30.0
		SMBH	16.8	16.7	16.7	23.1	22.9	22.7	26.2	26.2	26.0	21.1	20.8	20.7	27.6	27.1	26.7	30.6	30.3	30.0
		Power	2.94	2.93	2.92	2.93	2.92	2.92	2.93	2.92	2.91	3.46	3.40	3.39	3.44	3.38	3.37	3.43	3.37	3.36
	115°F	TMBH	25.8	25.8	25.7	25.6	25.5	25.5	25.2	25.2	25.0	32.2	32.0	32.0	30.6	30.5	30.4	29.7	29.4	29.1
		SMBH	16.1	16.1	16.0	22.4	22.2	21.9	25.2	25.2	25.0	20.4	20.2	20.0	27.1	26.4	26.1	29.7	29.4	29.1
		Power	3.11	3.10	3.09	3.11	3.10	3.09	3.10	3.09	3.08	3.66	3.60	3.59	3.65	3.59	3.57	3.64	3.57	3.56
	120° F	TMBH	24.5	24.5	24.5	24.4	24.4	24.3	24.2	24.1	24.0	30.8	30.7	30.7	29.4	29.3	29.3	28.7	28.4	28.2
		SMBH	15.4	15.4	15.2	21.5	21.4	21.2	24.2	24.1	24.0	19.8	19.5	19.4	26.5	25.9	25.6	28.7	28.4	28.2
		Power	3.29	3.28	3.28	3.29	3.28	3.28	3.29	3.28	3.27	3.87	3.82	3.81	3.86	3.80	3.79	3.86	3.79	3.78
	125° F	TMBH	23.3	23.3	23.3	23.2	23.2	23.1	23.0	23.0	22.9	29.5	29.5	29.4	28.2	28.2	28.1	27.7	27.5	27.3
		SMBH	14.7	14.7	14.6	20.6	20.5	20.3	23.0	23.0	22.9	19.1	18.8	18.7	25.9	25.5	25.1	27.7	27.5	27.3
		Power	3.49	3.48	3.48	3.49	3.48	3.48	3.50	3.48	3.47	4.11	4.04	4.03	4.09	4.03	4.02	4.09	4.02	4.01

MODEL			RHLH-042TM/SAGL-042NA									RHLH-048TM/SAGL-042TA								
INDOOR TEMP °F			80.6° FDB / 71.0° FWB			80.6° FDB / 66.2° FWB			80.6° FDB / 63.0° FWB			80.6° FDB / 71.0° FWB			80.6° FDB / 66.2° FWB			80.6° FDB / 63.0° FWB		
			High	Med	Low	High	Med	Low	High	Med	Low	High	Med	Low	High	Med	Low	High	Med	Low
DEPRESSION RATIO			0.20	0.22	0.24	0.20	0.22	0.24	0.20	0.22	0.24	0.20	0.22	0.24	0.20	0.22	0.24	0.20	0.22	0.24
CFM AIR VOL.			1355	1290	1250	1355	1290	1250	1355	1290	1250	1495	1355	1195	1495	1355	1195	1495	1355	1195
OUTDOOR TEMPERATURE	75°F	TMBH	41.5	41.3	41.1	38.8	38.5	38.3	36.6	36.4	36.3	43.6	43.2	42.5	40.3	39.8	39.1	37.7	37.4	36.9
		SMBH	25.0	24.6	24.3	31.0	30.3	29.9	35.2	34.4	33.9	25.6	24.8	23.7	31.7	30.4	28.8	36.1	34.4	32.4
		Power KW	2.59	2.53	2.52	2.58	2.52	2.51	2.57	2.51	2.50	2.36	2.33	2.30	2.33	2.31	2.28	2.31	2.29	2.26
	80°F	TMBH	40.6	40.3	40.2	37.8	37.6	37.5	35.8	35.5	35.4	42.6	42.2	41.6	39.3	38.8	38.2	36.9	36.4	35.9
		SMBH	24.6	24.2	23.9	30.5	29.9	29.5	34.8	34.0	33.5	25.2	24.4	23.4	31.3	30.0	28.5	36.9	33.9	32.0
		Power KW	2.72	2.66	2.64	2.71	2.64	2.63	2.70	2.64	2.63	2.50	2.47	2.44	2.47	2.44	2.41	2.46	2.43	2.40
	85°F	TMBH	39.6	39.3	39.2	36.9	36.7	36.6	34.8	34.7	34.6	41.5	41.1	40.5	38.3	37.9	37.3	36.1	35.5	35.0
		SMBH	24.2	23.8	23.5	30.1	29.5	29.1	34.4	33.6	33.1	24.8	24.0	23.0	30.9	29.6	28.0	36.1	33.7	31.5
		Power KW	2.85	2.79	2.78	2.84	2.78	2.77	2.83	2.77	2.76	2.64	2.62	2.59	2.62	2.59	2.56	2.60	2.57	2.54
	90°F	TMBH	38.5	38.4	38.2	36.0	35.8	35.6	34.0	33.8	33.7	40.5	40.0	39.5	37.3	36.9	36.3	35.3	34.6	34.0
		SMBH	23.7	23.3	23.1	29.7	29.1	28.7	34.0	33.2	32.6	24.5	23.6	22.6	30.5	29.2	27.6	35.3	34.6	31.2
		Power KW	3.00	2.94	2.92	2.98	2.92	2.91	2.97	2.91	2.90	2.80	2.77	2.74	2.76	2.74	2.71	2.75	2.72	2.69
	95°F	TMBH	37.5	37.3	37.2	35.1	34.9	34.7	33.2	32.9	32.8	39.3	38.9	38.4	36.2	35.9	35.3	34.5	33.7	33.1
		SMBH	23.3	22.9	22.7	28.5	28.7	28.3	33.2	32.9	32.3	24.0	23.2	22.2	30.2	28.8	27.2	34.5	33.7	30.7
		Power KW	3.15	3.09	3.07	3.13	3.07	3.06	3.12	3.06	3.05	2.96	2.93	2.90	2.93	2.90	2.87	2.91	2.89	2.86
	100°F	TMBH	36.4	36.2	36.0	34.1	33.9	33.8	32.4	32.1	31.9	38.1	37.8	37.3	35.1	34.8	34.3	33.6	32.9	32.1
		SMBH	22.8	22.4	22.2	28.9	28.2	27.8	32.4	32.1	31.8	23.5	22.8	21.7	29.9	28.4	26.9	33.6	32.9	30.5
		Power KW	3.31	3.25	3.24	3.29	3.23	3.22	3.28	3.22	3.21	3.14	3.11	3.08	3.11	3.08	3.05	3.10	3.06	3.03
	105°F	TMBH	35.2	35.1	35.0	33.1	32.9	32.8	31.7	31.3	31.1	36.9	36.7	36.2	34.0	33.7	33.3	32.8	32.1	31.1
		SMBH	22.3	21.9	21.7	28.4	27.8	27.4	31.7	31.3	31.1	23.1	22.3	21.3	29.4	28.0	26.4	32.8	32.1	31.1
		Power KW	3.48	3.42	3.41	3.46	3.40	3.39	3.45	3.39	3.38	3.33	3.30	3.27	3.31	3.27	3.24	3.28	3.25	3.22
	110°F	TMBH	34.0	33.9	33.8	32.0	31.9	31.8	30.8	30.5	30.3	35.7	35.5	35.0	32.9	32.4	32.2	31.8	31.2	30.3
		SMBH	21.7	21.4	21.2	28.0	27.3	27.0	30.8	30.5	30.3	22.7	21.9	20.9	29.0	27.6	26.0	31.8	31.2	30.3
		Power KW	3.66	3.60	3.59	3.65	3.58	3.57	3.64	3.57	3.56	3.54	3.51	3.48	3.51	3.46	3.44	3.49	3.46	3.42
	115°F	TMBH	32.8	32.7	32.6	30.9	30.8	30.8	30.0	29.6	29.5	34.7	34.5	33.9	31.5	31.4	31.1	30.9	30.3	29.5
		SMBH	21.2	20.9	20.6	27.6	27.0	26.5	30.0	29.6	29.5	22.3	21.5	20.5	28.6	27.2	25.6	30.9	30.3	29.5
		Power KW	3.85	3.79	3.78	3.84	3.78	3.77	3.83	3.77	3.76	3.77	3.74	3.70	3.71	3.69	3.66	3.71	3.67	3.64
	120°F	TMBH	31.6	31.5	31.4	29.8	29.7	29.7	29.1	28.8	28.6	33.3	33.1	32.7	30.2	30.1	30.0	29.9	29.2	28.6
		SMBH	20.6	20.3	20.1	27.1	26.4	26.2	29.1	28.8	28.6	21.8	21.0	20.0	28.1	26.8	25.2	29.9	29.2	28.6
		Power KW	4.06	3.99	3.98	4.05	3.98	3.97	4.04	3.98	3.97	3.99	3.97	3.93	3.94	3.92	3.90	3.94	3.90	3.88
	125°F	TMBH	30.3	30.3	30.2	28.7	28.6	28.5	28.2	27.9	27.7	32.1	31.9	31.5	29.1	29.0	28.8	29.0	28.5	27.7
		SMBH	20.0	19.7	19.5	26.7	26.1	25.6	28.2	27.9	27.7	21.3	20.5	19.6	27.8	26.4	24.8	29.0	28.5	27.7
		Power KW	4.27	4.21	4.20	4.26	4.20	4.19	4.26	4.20	4.19	4.24	4.21	4.19	4.20	4.17	4.14	4.20	4.16	4.12

Power: Total Unit Input Power (kW)

DR: Depression Ratio

dbE: Entering Air Temperature in ^{0}F

When the entering air dry bulb temperature is other than 80.6^{0}F, adjust the sensible capacity from the table by adding 1.1 x CFM X (1-DR) X (dbE-80.6)

PERFORMANCE DATA

MODEL			RHLH-054TM/SAGL-048NA									RHLH-065TM/SAGL-060NA								
INDOOR TEMP °F			80.6° FDB / 71.0° FWB			80.6° FDB / 66.2° FWB			80.6° FDB / 63.0° FWB			80.6° FDB / 71.0° FWB			80.6° FDB / 66.2° FWB			80.6° FDB / 63.0° FWB		
			High	Med	Low	High	Med	Low	High	Med	Low	High	Med	Low	High	Med	Low	High	Med	Low
DEPRESSION RATIO			0.21	0.23	0.25	0.21	0.23	0.25	0.21	0.23	0.25	0.14	0.16	0.18	0.14	0.16	0.18	0.14	0.16	0.18
CFM AIR VOL.			1720	1495	1355	1720	1495	1355	1720	1495	1355	1990	1865	1740	1990	1865	1740	1990	1865	1740
OUTDOOR TEMPERATURE	75°F	TMBH	48.8	48.0	47.4	45.1	44.3	43.6	42.3	41.7	41.1	67.4	66.9	66.2	62.9	62.3	61.6	59.5	59.0	58.3
		SMBH	29.8	28.5	27.5	36.7	34.7	33.3	41.9	39.2	37.3	39.7	38.8	37.9	49.0	47.6	46.2	55.6	53.9	52.1
		Power KW	2.83	2.70	2.67	2.72	2.68	2.65	2.71	2.67	2.64	4.21	4.15	4.12	4.18	4.12	4.09	4.16	4.10	4.06
	80°F	TMBH	47.8	46.8	46.3	44.1	43.3	42.7	41.2	40.6	40.2	65.7	65.2	64.6	61.4	60.9	60.3	58.0	57.5	57.0
		SMBH	29.4	28.0	27.1	36.3	34.3	32.9	41.2	38.6	37.1	39.0	38.1	37.3	48.3	46.9	45.6	55.1	53.3	51.5
		Power KW	2.88	2.84	2.81	2.86	2.82	2.80	2.85	2.81	2.78	4.41	4.35	4.32	4.39	4.33	4.29	4.36	4.30	4.26
	85°F	TMBH	46.6	45.8	45.2	43.0	42.2	41.6	40.4	39.5	39.2	63.9	63.6	63.0	59.9	59.4	58.8	56.5	56.2	55.6
		SMBH	28.9	27.6	26.6	35.9	33.8	32.4	40.4	38.1	36.5	38.2	37.4	36.6	47.7	46.3	44.9	54.6	52.6	50.8
		Power KW	3.03	2.99	2.96	3.01	2.97	2.94	3.00	2.95	2.92	4.63	4.57	4.54	4.60	4.54	4.50	4.57	4.51	4.47
	90°F	TMBH	45.4	44.6	44.0	41.8	41.2	40.6	39.6	38.6	38.1	62.2	61.8	61.3	58.4	57.8	57.3	55.2	54.6	54.0
		SMBH	28.5	27.1	26.2	35.5	33.3	32.0	39.6	37.8	36.1	37.4	36.7	35.9	47.0	45.7	44.2	53.9	52.0	50.2
		Power KW	3.19	3.15	3.12	3.17	3.13	3.10	3.16	3.11	3.09	4.86	4.80	4.77	4.83	4.77	4.73	4.81	4.73	4.69
	95°F	TMBH	44.1	43.3	42.9	40.6	40.0	39.5	38.7	37.4	37.1	60.3	59.9	59.5	56.8	56.3	55.8	53.5	53.0	52.6
		SMBH	28.0	26.6	25.7	35.1	32.9	31.5	38.7	37.4	35.6	36.5	35.9	35.1	45.9	45.0	43.6	53.0	51.3	49.6
		Power KW	3.36	3.32	3.29	3.34	3.30	3.27	3.33	3.28	3.26	5.10	5.04	5.01	5.07	5.01	4.97	5.03	4.97	4.93
	100°F	TMBH	42.8	42.1	41.7	39.4	38.9	38.4	37.7	36.5	35.9	58.3	58.0	57.7	55.0	54.7	54.1	52.0	51.5	51.0
		SMBH	27.5	26.1	25.3	34.7	32.5	31.0	37.7	36.5	35.2	35.6	35.0	34.3	45.6	44.2	42.8	52.0	50.6	48.8
		Power KW	3.55	3.51	3.48	3.52	3.48	3.45	3.51	3.47	3.44	5.35	5.30	5.26	5.32	5.26	5.23	5.29	5.22	5.19
	105°F	TMBH	41.4	40.8	40.3	38.1	37.6	37.2	36.8	35.6	34.8	56.3	56.1	55.8	53.2	52.9	52.5	50.6	49.8	49.4
		SMBH	27.0	25.6	24.7	34.3	32.1	30.5	36.8	35.6	34.7	34.7	34.1	33.4	44.9	43.6	42.1	50.6	49.7	48.1
		Power KW	3.74	3.70	3.67	3.72	3.68	3.65	3.71	3.67	3.63	5.62	5.56	5.53	5.59	5.53	5.50	5.56	5.49	5.45
	110°F	TMBH	40.0	39.4	39.0	36.8	36.3	35.9	35.7	34.6	33.8	54.3	54.0	53.7	51.5	51.1	50.7	49.2	48.4	47.7
		SMBH	26.4	25.1	24.2	33.6	31.7	30.0	35.7	34.6	33.8	33.6	33.1	32.5	44.2	42.9	41.5	49.2	48.4	47.3
		Power KW	3.95	3.91	3.89	3.93	3.89	3.86	3.92	3.88	3.85	5.90	5.85	5.81	5.88	5.82	5.78	5.85	5.78	5.74
	115°F	TMBH	38.6	38.0	37.6	35.4	34.9	34.6	34.6	33.6	32.8	52.1	51.9	51.7	49.6	49.3	48.9	47.7	47.0	46.1
		SMBH	25.9	24.6	23.7	33.1	31.0	29.7	34.6	33.6	32.8	32.5	32.0	31.5	43.4	42.1	40.8	47.7	47.0	46.0
		Power KW	4.18	4.14	4.11	4.16	4.12	4.09	4.15	4.11	4.08	6.20	6.14	6.11	6.17	6.12	6.08	6.15	6.08	6.03
	120°F	TMBH	37.1	36.6	36.2	33.9	33.6	33.2	33.5	32.5	31.8	49.9	49.8	49.6	47.7	47.4	47.0	46.2	45.5	44.8
		SMBH	25.3	24.0	23.1	32.6	30.5	29.2	33.5	32.5	31.8	31.4	30.9	30.4	42.4	41.3	40.0	46.2	45.5	44.8
		Power KW	4.42	4.38	4.36	4.40	4.36	4.34	4.40	4.35	4.32	6.51	6.45	6.42	6.49	6.43	6.39	6.47	6.40	6.36
	125°F	TMBH	35.5	35.1	34.7	32.4	32.1	31.8	32.3	31.4	30.7	47.6	47.6	47.4	45.7	45.5	45.1	44.6	44.0	43.3
		SMBH	24.7	23.4	22.6	32.2	30.0	28.7	32.3	31.4	30.7	30.3	29.8	29.4	41.4	40.4	39.2	44.6	44.0	43.3
		Power KW	4.68	4.64	4.61	4.66	4.62	4.59	4.66	4.62	4.59	6.82	6.77	6.74	6.81	6.75	6.72	6.80	6.73	6.69

MODEL			RHLH-065TM/SAGL-061NA								
INDOOR TEMP °F			80.6 F (27.0C) DB / 71.0 F (21.7C) WB			80.6 F (27.0C) DB / 66.2F (19.0C) WB			80.6 F (27C) DB / 63.0 F (17.2C) WB		
			High	Med	Low	High	Med	Low	High	Med	Low
CFM AIR VOL			1990	1865	1740	1990	1865	1740	1990	1865	1740
OUTDOOR TEMPERATURE °F	75F(23.9C)	Total MBH	67.4	66.9	66.2	62.9	62.3	61.6	59.5	59.0	58.3
		Sens MBH	39.7	38.8	37.9	49.0	47.6	46.2	55.6	53.9	52.1
		Power KW	3.89	3.83	3.80	3.86	3.80	3.77	3.84	3.78	3.74
	80F(26.7C)	Total MBH	65.7	65.2	64.6	61.4	60.9	60.3	58.0	57.5	57.0
		Sens MBH	39.0	38.1	37.3	48.3	46.9	45.6	55.1	53.3	51.5
		Power KW	4.09	4.03	4.00	4.07	4.01	3.97	4.04	3.98	3.94
	85F(29.4C)	Total MBH	63.9	63.6	63.0	59.9	59.4	58.8	56.5	56.2	55.6
		Sens MBH	38.2	37.4	36.6	47.7	46.3	44.9	54.6	52.6	50.8
		Power KW	4.31	4.25	4.22	4.28	4.22	4.18	4.25	4.19	4.15
	90F(32.3C)	Total MBH	62.2	61.8	61.3	58.4	57.8	57.3	55.2	54.6	54.0
		Sens MBH	37.4	36.7	35.9	47.0	45.7	44.2	53.9	52.0	50.2
		Power KW	4.54	4.48	4.45	4.51	4.45	4.41	4.49	4.41	4.37
	95F(35.0C)	Total MBH	60.3	59.9	59.5	56.8	56.3	55.8	53.5	53.0	52.6
		Sens MBH	36.5	35.9	35.1	45.9	45.0	43.6	53.0	51.3	49.6
		Power KW	4.78	4.72	4.69	4.75	4.69	4.65	4.71	4.65	4.61
	100F(37.8C)	Total MBH	58.3	58.0	57.7	55.0	54.7	54.1	52.0	51.5	51.0
		Sens MBH	35.6	35.0	34.3	45.6	44.2	42.8	52.0	50.6	48.8
		Power KW	5.03	4.98	4.94	5.00	4.94	4.91	4.97	4.90	4.87
	105F(40.6C)	Total MBH	56.3	56.1	55.8	53.2	52.9	52.5	50.6	49.8	49.4
		Sens MBH	34.7	34.1	33.4	44.9	43.6	42.1	50.6	49.7	48.1
		Power KW	5.30	5.24	5.21	5.27	5.21	5.18	5.24	5.17	5.13
	110F(43.3C)	Total MBH	54.3	54.0	53.7	51.5	51.1	50.7	49.2	48.4	47.7
		Sens MBH	33.6	33.1	32.5	44.2	42.9	41.5	49.2	48.4	47.3
		Power KW	5.58	5.53	5.49	5.56	5.50	5.46	5.53	5.46	5.42
	115F(46.1C)	Total MBH	52.1	51.9	51.7	49.6	49.3	48.9	47.7	47.0	46.1
		Sens MBH	32.5	32.0	31.5	43.4	42.1	40.8	47.7	47.0	46.0
		Power KW	5.88	5.82	5.79	5.85	5.80	5.76	5.83	5.76	5.71
	120F(48.9C)	Total MBH	49.9	49.8	49.6	47.7	47.4	47.0	46.2	45.5	44.8
		Sens MBH	31.4	30.9	30.4	42.4	41.3	40.0	46.2	45.5	44.8
		Power KW	6.19	6.13	6.10	6.17	6.11	6.07	6.15	6.08	6.04
	125F(51.7C)	Total MBH	47.6	47.6	47.4	45.7	45.5	45.1	44.6	44.0	43.3
		Sens MBH	30.3	29.8	29.4	41.4	40.4	39.2	44.6	44.0	43.3
		Power KW	6.50	6.45	6.42	6.49	6.43	6.40	6.48	6.41	6.37

Power: Total Unit Input Power (kW)
DR: Depression Ratio
dbE: Entering Air Temperature in ^{0}F

When the entering air dry bulb temperature is other than 80.6^{0}F, adjust the sensible capacity from the table by adding 1.1 x CFM X (1-DR) X (dbE-80.6)

PIPE SIZE CHART

Single Stage	Liquid Line Size	Suction Line Size	Outdoor Unit ABOVE Indoor Unit											
			Equivelent Length in Meters											
			Condition - A			Condition - B			Condition - C					
			<15	15.5-22.5	23-45	38-45	45-75	75-90	45.5-52.5	53-60	61.5-67.5	68-75	75.5-82.5	83-90
			Maximum Vertical Seperation / Capacity Multiplier											
SAGL-018	1/4"	5/8"	15 / 1.00	22.5 / 0.99	33.5 / 0.99	40 / 0.98	N/A	N/A	52.5 / 0.97	N/A	N/A	N/A	N/A	N/A
	5/16"	5/8"	15 / 1.00	22.5 / 0.99	33.5 / 0.98	40 / 0.98	45 / 0.96	45 / 0.95	52.5 / 0.97	58 / 0.97	56 / 0.96	55 / 0.96	52.5 / 0.96	52.5 / 0.95
	3/8"	5/8"	15 / 1.00	22.5 / 0.99	33.5 / 0.98	40 / 0.98	45 / 0.96	45 / 0.95	52.5 / 0.97	60 / 0.97	60 / 0.96	60 / 0.96	60 / 0.96	60 / 0.95
SAGL-024	1/4"	5/8"	15 / 1.00	22.5 / 0.99	33.5 / 0.98	N/A	N/A	N/A	N/A	N/A	N/A	N/A	N/A	N/A
	5/16"	5/8"	15 / 1.00	22.5 / 0.99	33.5 / 0.98	40 / 0.97	45 / 0.95	N/A	52 / 0.97	55 / 0.96	50 / 0.95	47 / 0.95	N/A	N/A
	3/8"	5/8"	15 / 1.00	22.5 / 0.99	33.5 / 0.98	40 / 0.97	45 / 0.95	45 / 0.94	52.5 / 0.97	60 / 0.96	60 / 0.95	60 / 0.95	60 / 0.95	60* / 0.94
SAGL-030	5/16"	5/8"	15 / 0.98	22.5 / 0.97	33.5 / 0.97	40 / 0.95	N/A	N/A	N/A	N/A	N/A	N/A	N/A	N/A
	3/8"	5/8"	15 / 0.98	22.5 / 0.97	33.5 / 0.97	40 / 0.95	45 / 0.92	45 / 0.91	52.5 / 0.94	60 / 0.93	60 / 0.93	60 / 0.92	60* / 0.92	60* / 0.91
	5/16"	3/4"	15 / 1.00	22.5 / 0.99	33.5 / 0.99	40 / 0.98	N/A	N/A	N/A	N/A	N/A	N/A	N/A	N/A
	3/8"	3/4"	15 / 1.00	22.5 / 0.99	33.5 / 0.99	40 / 0.98	45 / 0.97	45 / 0.96	52.5 / 0.98	60 / 0.98	60 / 0.97	60 / 0.97	60* / 0.97	60* / 0.96
SAGL-036	5/16"	5/8"	15 / 0.98	22.5 / 0.97	33.5 / 0.96	40 / 0.93	N/A	N/A	N/A	N/A	N/A	N/A	N/A	N/A
	3/8"	5/8"	15 / 0.98	22.5 / 0.97	33.5 / 0.96	40 / 0.93	45 / 0.90	45 / 0.88	52.5 / 0.93	60 / 0.91	60 / 0.90	60 / 0.90	60* / 0.89	60* / 0.88
	5/16"	3/4"	15 / 1.00	22.5 / 0.99	33.5 / 0.99	40 / 0.98	N/A	N/A	N/A	N/A	N/A	N/A	N/A	N/A
	3/8"	3/4"	15 / 1.00	22.5 / 1.00	33.5 / 0.99	40 / 0.97	45 / 0.97	45 / 0.96	52.5 / 0.96	60 / 0.98	60 / 0.97	60 / 0.97	60* / 0.96	60* / 0.96
SAGL-042	5/16"	3/4"	15 / 1.00	22.5 / 0.99	33.5 / 0.99	N/A	N/A	N/A	N/A	N/A	N/A	N/A	N/A	N/A
	3/8"	3/4"	15 / 1.00	22.5 / 0.99	33.5 / 0.99	40 / 0.98	45 / 0.96	45 / 0.95	52.5 / 0.98	60 / 0.97	60 / 0.97	60* / 0.96	60* / 0.96	60* / 0.95
	5/16"	7/8"	15 / 1.00	22.5 / 1.00	33.5 / 1.00	N/A	N/A	N/A	N/A	N/A	N/A	N/A	N/A	N/A
	3/8"	7/8"	15 / 1.00	22.5 / 1.00	33.5 / 1.00	40 / 1.00	45 / 0.96	45 / 0.95	52.5 / 0.99	60 / 0.99	60 / 0.99	60* / 0.96	60* / 0.96	60* / 0.95
SAGL-048	3/8"	3/4"	15 / 0.98	22.5 / 0.97	33.5 / 0.96	40 / 0.95	45 / 0.92	45 / 0.91	52.5 / 0.94	60* / 0.93	60* / 0.92	58* / 0.92	52* / 0.92	47* / 0.91
	1/2"	3/4"	15 / 0.98	22.5 / 0.97	33.5 / 0.96	40 / 0.95	45 / 0.92	45 / 0.91	52.5 / 0.94	60 / 0.93	60 / 0.92	60 / 0.92	60* / 0.92	60* / 0.91
	3/8"	7/8"	15 / 1.00	22.5 / 0.98	33.5 / 0.98	40 / 0.97	45 / 0.96	45 / 0.96	52.5 / 0.97	60* / 0.97	60* / 0.96	58* / 0.96	52* / 0.96	47* / 0.96
	1/2"	7/8"	15 / 1.00	22.5 / 0.98	33.5 / 0.98	40 / 0.97	45 / 0.96	45 / 0.96	52.5 / 0.97	60 / 0.97	60 / 0.96	60 / 0.96	60* / 0.96	60* / 0.96
SAGL-060/065	3/8"	3/4"	15 / 0.98	22.5 / 0.96	33.5 / 0.95	40 / 0.93	45 / 0.90	N/A	52.5 / 0.92	60* / 0.92	55* / 0.91	49* / 0.90	N/A	N/A
	1/2"	3/4"	15 / 0.98	22.5 / 0.96	33.5 / 0.95	40 / 0.93	45 / 0.90	45 / 0.89	52.5 / 0.92	60 / 0.92	60 / 0.91	60 / 0.90	60* / 0.90	60* / 0.89
	3/8"	7/8"	15 / 1.00	22.5 / 0.99	33.5 / 0.98	40 / 0.97	45 / 0.95	N/A	52.5 / 0.97	60* / 0.96	55* / 0.96	49* / 0.95	N/A	N/A
	1/2"	7/8"	15 / 1.00	22.5 / 0.99	33.5 / 0.98	40 / 0.97	45 / 0.95	45 / 0.94	52.5 / 0.97	60 / 0.96	60 / 0.96	60 / 0.95	60* / 0.95	60* / 0.94

Note: This chart is applicable for ODU with scroll compressor only.

Light Gray - (<45m vertical seperation) — Use Oil Separator and Crank case heater. (Less than 45m vertical seperation)

Dark Gray — Use Oil Separator, Crank case heater, Hard Start Kit and Non-bleed TXV.

Black — Not Recommended

* Appications with asterisks (*) require a minimum of 15m vertical seperation.

Condition	Total Equivalent Length (M)	Max. Vertical Seperation (M)
A	3 ~ 45	<33.5
B	50.1 ~ 90	34 ~ 45
C	50.1 ~ 90	45.1 ~ 60

PIPE SIZE CHART

Single Stage	Liquid Line Size	Suction Line Size	Outdoor Unit BELOW Indoor Unit										
			Equivelent Length in Meter										
			<15	15.5-22.5	23-30	30.5-37.5	38 - 45	45.5-52.5	53-60	61.5-67.5	68-75	75.6-82.5	83-90
			Maximum vertical Seperation / Capacity Multiplier										
SAGL-018	5/16"	5/8"	15/0.99	21.0/0.99	18/0.98	13.5/0.98	10.5/0.98	6/0.97	3/0.97	N/A	N/A	N/A	N/A
	3/8"	5/8"	15/0.99	22.5/0.99	24.5/0.98	24.5/0.98	24.5/0.98	24.5/0.97	24.5/0.97	24.5/0.96	24.5/0.96	18/0.96	15/0.95
	5/16"	3/4"	15/1.00	21.0/1.00	18/1.00	13.5/1.00	10.5/0.99	6/0.99	3/0.99	N/A	N/A	N/A	N/A
	3/8"	3/4"	15/1.00	22.5/1.00	24.5/1.00	24.5/1.00	24.5/0.99	24.5/0.99	24.5/0.99	24.5/0.99	24.5/0.99	18/0.99	15/0.99
SAGL-024	5/16"	5/8"	15/1.00	13.5/0.99	25/0.98	N/A	N/A	N/A	N/A	N/A	N/A	N/A	N/A
	3/8"	5/8"	15/1.00	22.5/0.99	24.5/0.98	24.5/0.97	24.5/0.97	24.5/0.96	24.5/0.95	24.5/0.94	24.5/0.94	9/0.94	3/0.93
	5/16"	3/4"	15/1.00	13.5/1.00	25/1.00	N/A	N/A	N/A	N/A	N/A	N/A	N/A	N/A
	3/8"	3/4"	15/1.00	22.5/1.00	24.5/1.00	24.5/1.00	24.5/0.99	24.5/0.99	24.5/0.99	24.5/0.99	24.5/0.98	9/0.98	3/0.98
SAGL-030	5/16'	5/8"	12/09.8	3/0.97	N/A	N/A	N/A	N/A	N/A	N/A	N/A	N/A	N/A
	3/8"	5/8"	15/0.98	22.5/0.97	24.5/0.97	24.5/0.96	24.5/0.96	24.5/0.95	24.5/0.94	24.5/0.93	24.5/0.93	15/0.92	N/A
	5/16"	3/4"	12/1.00	3/0.99	N/A	N/A	N/A	N/A	N/A	N/A	N/A	N/A	N/A
	3/8"	3/4"	15/1.00	22.5/0.99	24.5/0.99	24.5/0.99	24.5/0.98	24.5/0.98	24.5/0.98	24.5/0.98	24.5/0.97	15/0.97	N/A
SAGL-036	5/16"	3/4"	10.5/1.00	10/0.99	N/A	N/A	N/A	N/A	N/A	N/A	N/A	N/A	N/A
	3/8"	3/4"	15/1.00	22.5/0.99	24.5/0.98	24.5/0.98	24.5/0.98	24.5/0.97	24.5/0.97	24.5/0.97	24.5/0.96	10/0.96	N/A
	1/2"	3/4"	15/1.00	22.5/0.99	24.5/0.98	24.5/0.98	24.5/0.98	24.5/0.97	24.5/0.97	24.5/0.97	24.5/0.96	24.5/0.96	24.5/09.5
	3/8"	7/8"	15/1.00	22.5/1.00	24.5/1.00	24.5/1.00	24.5/0.99	24.5/0.99	24.5/0.99	24.5/0.99	24.5/0.98	10/0.98	N/A
	1/2"	7/8"	15/1.00	22.5/1.00	24.5/1.00	24.5/1.00	24.5/0.99	24.5/0.99	24.5/0.99	24.5/0.99	24.5/0.98	24.5/0.98	24.5/0.98
SAGL-042	3/8"	3/4"	15/0.99	22.5/0.99	24.5/0.98	24.5/0.98	24.5/0.97	24.5/0.97	24.5/0.96	24.5/0.96	21.0/0.95	N/A	N/A
	1/2"	3/4"	15/0.99	22.5/0.99	24.5/0.98	24.5/0.98	24.5/0.97	24.5/0.97	24.5/0.96	24.5/0.96	24.5/0.95	21.0/0.95	18/0.94
	3/8"	7/8"	15/1.00	22.5/1.00	24.5/1.00	24.5/1.00	24.5/1.00	24.5/0.99	24.5/0.99	24.5/0.99	21.0/0.98	N/A	N/A
	1/2"	7/8"	15/1.00	22.5/1.00	24.5/1.00	24.5/1.00	24.5/1.00	24.5/0.99	24.5/0.99	24.5/0.99	24.5/0.98	21.0/0.98	18/0.97
SAGL-048	3/8"	3/4"	15/0.99	22.5/0.99	24.5/0.98	24.5/0.98	24.5/0.97	24.5/0.97	24.5/0.96	21.0/0.96	15/0.95	N/A	N/A
	1/2"	3/4"	15/0.99	22.5/0.99	24.5/0.98	24.5/0.98	24.5/0.97	24.5/0.97	24.5/0.96	24.5/0.96	24.5/0.95	18/0.95	12/0.94
	3/8"	7/8"	15/1.00	22.5/1.00	24.5/1.00	24.5/1.00	24.5/1.00	24.5/0.99	24.5/0.99	21.0/0.99	15/0.98	N/A	N/A
	1/2"	7/8"	15/1.00	22.5/1.00	24.5/1.00	24.5/1.00	24.5/1.00	24.5/0.99	24.5/0.99	24.5/0.99	24.5/0.98	18/0.98	12/0.97
SAGL-060/065	3/8"	3/4"	15/0.98	22.5/0.98	24.5/0.97	24.5/0.96	24.5/0.96	24.5/0.95	12/0.94	6/0.94	N/A	N/A	N/A
	1/2"	3/4"	15/0.98	22.5/0.98	24.5/0.97	24.5/0.96	24.5/0.96	24.5/0.95	21.0/0.94	15/0.94	9/0.93	N/A	N/A
	3/8"	7/8"	15/1.00	22.5/0.99	24.5/0.99	24.5/0.98	24.5/0.98	18/0.97	12/0.97	6/0.96	N/A	N/A	N/A
	1/2"	7/8"	15/1.00	22.5/0.99	24.5/0.99	24.5/0.98	24.5/0.98	24.5/0.97	21.0/0.97	15/0.96	9/0.96	N/A	N/A

Always Use the smallest Liquid Line allowable to keep system charge to a minimum

Areas in light grey shade requires long line set application (Use Oil Separator, Crank case heater, Hard Start Kit and Non-bleed TXV).

Do not use line sets in areas shaded in Dark Grey

Vertical separation cannot Exceed 24.5 meter of length.

Note: This chart is applicable for ODU with scroll compressor only

Notes

Notes

Notes

The new degree of comfort.™

The new degree of comfort.™

Why Rheem?

American Brand with Global Reach, Dedicated to Quality & Innovation

Rheem is the only North American manufacturer delivering advanced, energy-efficient air and watersolutions to homes and businesses in more than 70 countries world-wide. From its Atlanta Headquarters, three U.S. manufacturing facilities and Advanced Technology Integration (ATI) Lab and with its manufacturing, research and development centers all around the world, Rheem designs, builds and supplies some of the most reliable, environmentally responsible and high-performance products in the industry.

In the Middle East, Rheem has been present and our products are in service for over 30 years with more than one million ton of Rheem Air-conditioning products installed.

Rheem products include (but not limited to):

- Full range of direct expansion Air-conditioning solutions such as: Rooftop package units, ducted units, decorative splits.
- Advanced Integrated Air-conditioning, Heating & Water Heating energy saving and comfort systems such as: H2AC and HumidiDry.
- Full range of water heating products including: electric tank and tankless water heaters (electric and gas), boilers, heat-pump water heaters and solar powered water heating solutions.

For more information about our products and local distributors, please visit us at: **www.Rheem-mea.com**

For continuous product improvement, Rheem reserves the right to make changes to the product specifications without notice.